

Motor Driven Systems

Reference Manual

Author Dr Lal Jayamaha

Reference Manual for
Motor Driven Systems

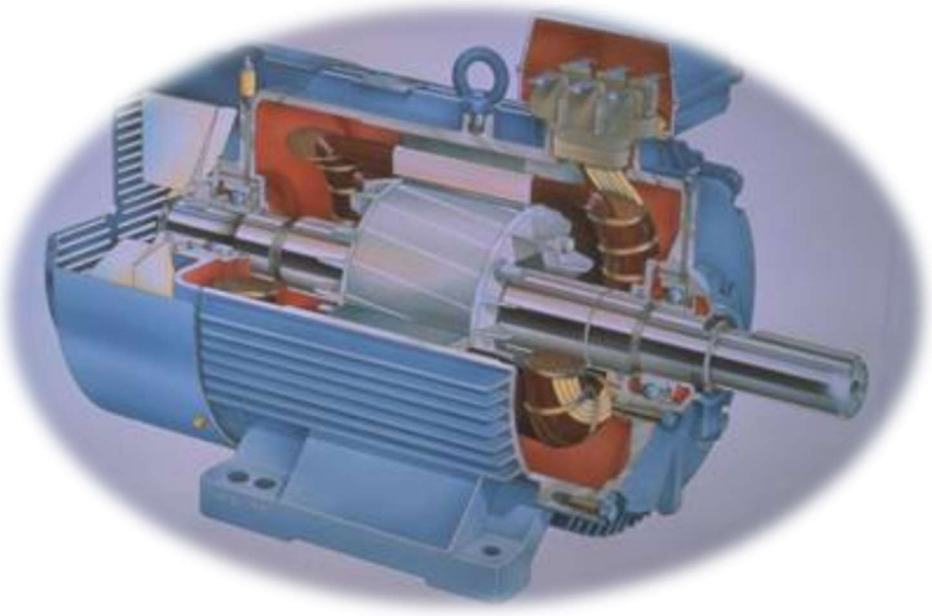

Professional Level Core Module of Singapore Certified Energy Manager (SCEM) Programme

Acknowledgements

The reference manual ***Motor Driven Systems*** for the Professional Level core module of the Singapore Certified Energy Manager Programme was developed for the National Environment Agency.

The material was prepared by LJ Energy Pte Ltd. We wish to thank the following organisations for providing various diagrams, photographs and reference data for this manual:

ABB
AMCA (Air Movement & Control Association)
Danfoss
Ebm-papst
Flakt Woods
Grundfoss
IEC (International Electrotechnical Commission)
ITT Industries
Johnson Controls
NEMA (National Electrical Manufacturers Association)
Pacific Light

© Copyright is jointly owned by The National Environment Agency and LJ Energy Pte Ltd. No part of this publication may be reproduced or distributed in any form or by any means without the prior written permission of the copyright owners.

March 2018

For

National Environment Agency
Singapore

By
LJ Energy Pte Ltd
Singapore

Table of Contents

1.0 INTRODUCTION TO MOTOR DRIVEN SYSTEMS 1
1.1 Types of motor driven systems 1
1.2 Motor and load torque 1
1.3 Overall efficiency of motor driven systems 11
1.4 Power supply to motors 12
1.5 Improving efficiency of motor driven systems 20
2.0 MOTORS 24
2.1 AC induction motors 24
2.2 DC motors 30
2.3 Brushless electronically commutated (EC) motors 41
2.4 Synchronous motors 42
2.5 Universal motors 43
2.6 Motor selection 44
2.7 Motor requirements for special applications 49
3.0 MOTOR EFFICIENCY 52
3.1 Energy losses in motors 52
3.2 High efficiency motors 55
3.3 Impact of motor loading on efficiency 58
3.4 Estimating motor loading 59
3.5 Economics of energy efficient motors 61
4.0 FAN SYSTEMS 67
4.1 Types of fans 68
4.2 Fan and system characteristics 74
4.3 Fan selection 75
4.4 Theoretical fan power consumption 78
4.5 Fan efficiency 78
4.6 Overall fan efficiency 87
4.7 Affinity laws 90
4.8 System losses 92
4.9 Fan discharge and inlet system effects 96
4.10 Filter losses 99
4.11 Coil losses 102
4.12 Right sizing of fans 103

4.13 Modulating airflow rate 105
4.14 Special high efficiency fan designs 109
4.15 Case studies on fan system improvement projects 111
5.0 PUMPING SYSTEMS 119
5.1 Types of pumps 119
5.2 System and Pump Curves 122
5.3 Pump net positive suction head (NPSH) 126
5.4 Pump power 127
5.5 Affinity laws 128
5.6 Pressure losses in pipes and fittings 129
5.7 Parallel and series pumping 136
5.8 Pump sizing 137
5.9 Constant flow vs variable flow systems 140
5.10 Effect of pump speed and size on efficiency 141
5.11 Avoiding use of bypass systems 144
5.12 Use of small pumps to augment larger pumps 144
5.13 Designing to minimise pressure losses 145
5.14 Eliminating triple-duty valves 147
5.15 Eliminating constant flow valves 149
5.16 Pump entry and discharge losses 150
5.17 Pump efficiency 151
5.18 Case studies on optimisation of pumping systems 152
6.0 COMPRESSORS 165
6.1 Introduction 165
6.2 Types of compressors 166
6.3 Compression process 170
6.4 Energy saving opportunities 172
7.0 VERTICAL TRANSPORTATION SYSTEMS 182
7.1 Introduction to lifts 182
7.2 Types of lift (traction vs hydraulic lifts) 184
7.3 Motors and types of drive 184
7.4 Regeneration 185
7.5 Gearless systems 189
7.6 Sizing 192
7.7 Controls 192

7.8 Escalators 193

8.0 VARIABLE SPEED DRIVES 194
8.1 Introduction 194
8.2 Components of a VSD 195
8.3 VSD characteristics 204
8.4 Sizing of VSDs 208
8.5 Features of VSDs 209
8.6 Typical applications 211
8.7 Selection and Installation 214
8.8 General list of selection criteria for VSDs 216

9.0 MAINTENANCE OF MOTOR DRIVEN SYSTEMS 218
9.1 Importance of maintaining motors 218
9.2 Types of maintenance programmes 220
9.3 Good maintenance practices 222

10.0 TRANSMISSION DRIVES 227
10.1 Couplings 228
10.2 Belt drives 229
10.3 Gear drives 230
10.4 Chain and sprocket 232
10.5 Wire-to-water and wire-to-air efficiency 232
10.6 Prioritising efforts to improve energy efficiency 239

11.0 DEMAND MANAGEMENT 242
11.1 Maximum power demand 242
11.2 Load factor 243
11.3 Peak shaving 244
11.4 Load shifting 245
11.5 Energy management 247

12.0 CASE STUDY 249

MOTOR DRIVEN SYSTEMS ABRIDGED SYLLABUS 251

REVIEW QUESTIONS 253

PREFACE

The Singapore Certified Energy Manager (SCEM) programme offers a formal training and certification system for energy managers in Singapore and is co-administered by the National Environment Agency (NEA) and The Institution of Engineers, Singapore (IES) since 2008. The programme equips facility managers, engineers, technicians and others who intend to build their careers as energy professionals, with the technical skills and competencies needed to manage energy services within their organisations.

The Motor Driven Systems (MDS) module is one of the four core modules in the SCEM programme and this MDS reference manual aims to help SCEM candidates with their course work and serve as reference material with local case studies for practising energy managers.

The reference manual contains twelve chapters on different aspects of how to design and operate common types of motor driven systems to be energy efficient. Each chapter includes a brief introduction to assist readers who may not be familiar with some of the basic concepts associated with each topic, and the expected learning objectives.

Chapters 1 to 3 provide an introduction to the various types of motors, motor characteristics and motor efficiency, followed by how to select motors for various applications to ensure optimum operation.

Chapters 4 to 7 cover the most common types of motor driven systems found in industrial facilities which includes, fans, pumps, compressors and vertical transportation systems. Some of the topics covered include typical operating characteristics, types of losses, best practices and examples on how to optimise each system.

Variable speed drives (VSDs) are widely used to optimise the operation of motor driven systems. Chapter 8 provides an introduction to their construction, characteristics and applications.

Chapter 9 covers some of the important maintenance aspects of motor driven systems while chapter 10 describes the various types of transmission drives. Chapter 11 contains demand management strategies to reduce the maximum power demand of

motor driven systems. Finally, a comprehensive case study on optimising the operation of a pumping system is provided in chapter 12.

I would like to take this opportunity to thank all those who have assisted in the preparation of this reference manual by providing technical information, images and case studies.

Dr Lal Jayamaha
LJ Energy Pte Ltd

1.0 INTRODUCTION TO MOTOR DRIVEN SYSTEMS

This chapter provides an introduction to motor driven systems used in buildings and industrial facilities.

Learning Outcomes:

The main learning outcomes from this chapter are to understand:

1. The different types of motor driven systems
2. Typical efficiency of motor driven systems
3. Potential for improving efficiency of motor driven systems

1.1 Types of motor driven systems

Motor driven systems consist of various machinery combinations such as pumps, fans, compressors and conveying systems coupled to an electric motor either, directly or through a transmission device. Figure 1.1 shows a typical motor driven pumping system which consists of a VSD (variable speed drive), motor, mechanical coupling and a pump.

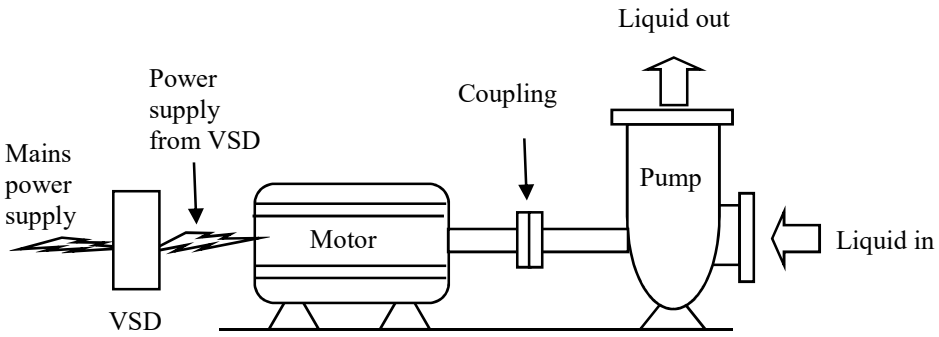

Figure 1.1 Arrangement of a typical pumping system

Such motor driven systems are used in numerous applications and account for 38% and 69% of commercial and industrial electricity consumption respectively, and between 43% to 46% of all global electricity consumption [1].

1.2 Motor and load torque

A mechanical load is coupled to a motor through a transmission drive and the motor has to generate the torque required to enable the load to perform the mechanical work as well as to overcome the mechanical losses.

Torque is the product of the force and perpendicular distance between the axis of rotation and the point of application of the force (Figure 1.2).

$$T = F \times r \quad (1.1)$$

where,
T = torque (N.m)
F = force (N)
r = perpendicular distance (m)

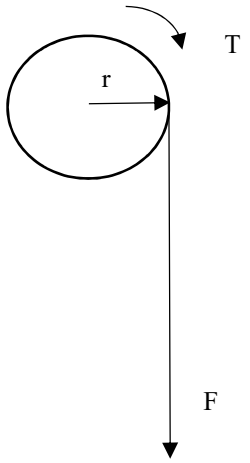

Figure 1.2 Representation of torque

Mechanical work is performed when a force F, moves a distance d, in the direction of the force. Work done can be expressed as:

$$W = F \times d \quad (1.2)$$

where,
F = force (N)
d = distance moved by the force (m)

Power is the work done per second and can be expressed as:

$$P = \frac{W}{t} \text{ (Watts)} \quad (1.3)$$

Also,

$$P = \frac{F \times d}{t} \quad \text{(Watts)} \qquad (1.4)$$

where,

W = work done (J)

t = time taken to do work (s)

d = distance moved by the force

Power can also be expressed in terms of torque and angular speed as follows:

$$P = T \times \omega \quad \text{(Watts)} \qquad (1.5)$$

where,

ω = angular speed (rad/s)

Example 1.1

A hoist lifts a mass of 500 kg as shown in Figure 1.3. The pulley radius is 200 mm and the rotational speed is 119.4 rpm. If the mass moves 10 m in 4 seconds, using equations (1.4) and (1.5), compute the motor power required in kW.

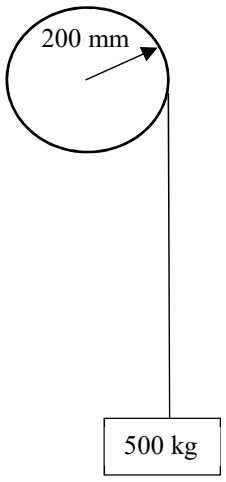

Figure 1.3 For Example 1.1

Solution

Using equation (1.4),

$$P = \frac{500 \times 9.81 \times 10}{4} = 12{,}262 \text{ W} = 12.3 \text{ kW}$$

From equation (1.1), Torque, T = F x r = 500 x 9.81 x 0.2 = 981 Nm

Using equation (1.5),
P = 981 x 2π x (119.4/60) = 12,260 W = 12.3 kW

The torque required by the load is dependent on the following three components:

1. Torque required to perform the mechanical work
2. Torque required to overcome friction and windage losses
3. Torque required to accelerate the load to the operating speed

Therefore, the total load torque can be expressed as follows:

$$T_L = T_w + T_{loss} + T_a \quad (1.6)$$

where,
T_L = total load torque
T_w = torque required to perform mechanical work
T_{loss} = torque to overcome losses
T_a = torque required for acceleration

Torque required to do mechanical work

Torque required to perform mechanical work is dependent on the type of load. The torque can be constant at all speeds or may vary with speed. Figure 1.4 shows a constant torque load and a typical speed-torque characteristic for a compressor load.

For such a load,

$$T_w = K \quad (1.7)$$

where,
T_w = torque required to perform mechanical work
K = a constant

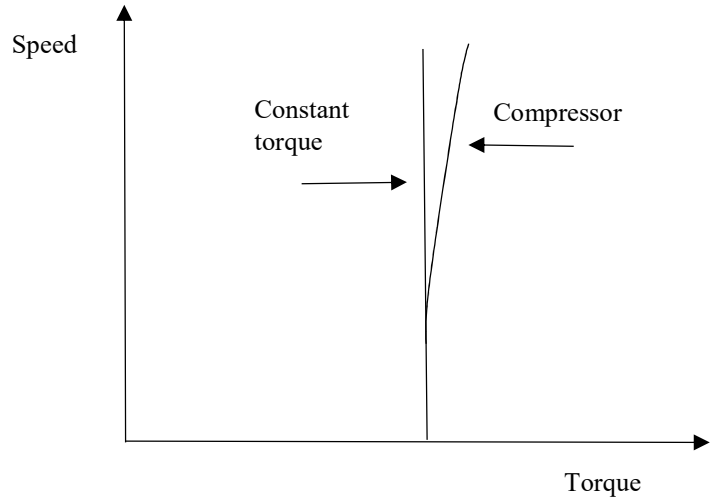

Figure 1.4 Constant load torque and compressor torque characteristic

Another type of load is where the power remains constant at all speeds. This type of load torque is encountered in steel rolling mills and paper mills.

Since power is equal to the product of torque and angular speed ($P = T \times \omega$), when power is constant, torque is proportional to the reciprocal of the angular speed (equation (1.8)). The speed vs torque relationship for a constant power load is shown in Figure 1.5.

For such a load,

$$T_w = K \times 1/\omega \qquad (1.8)$$

where,

T_w = torque required to perform mechanical work

K = constant

ω = rotational speed

The most common type of load in industry is where the torque is proportional to the square of the speed (as in the case of centrifugal fans and pumps).

For such a load,

$$T_w = K \times \omega^2 \qquad (1.9)$$

where,

T_w = torque required to perform mechanical work

K = constant

ω = rotational speed

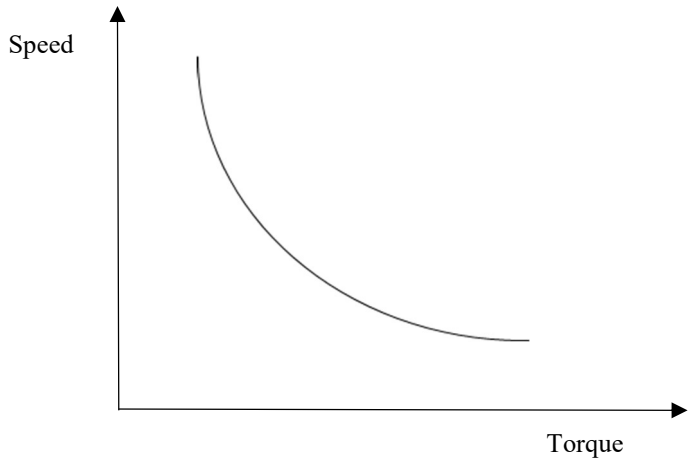

Figure 1.5 Torque for constant power load

For such a load, power required at the motor shaft,

$P = K \omega^3$ (1.10)

The speed vs torque characteristic for such a load is shown in Figure 1.6.

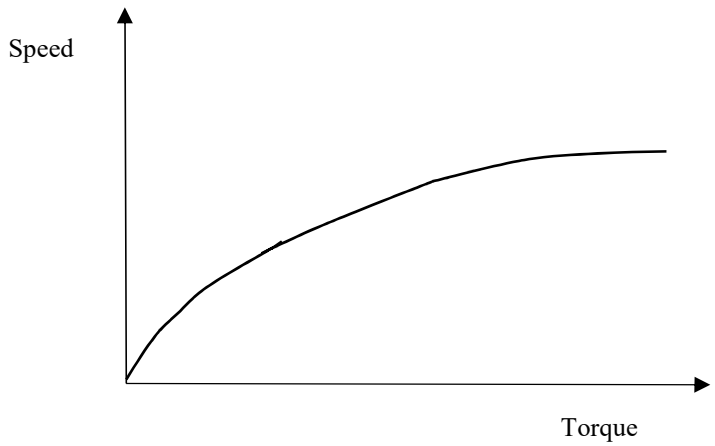

Figure 1.6 Torque characteristic for centrifugal loads

Torque required to overcome losses

Frictional forces caused by mechanical motion of the load and transmission result in losses. In addition, there are friction and windage losses that arise in the motor. The torque developed by the motor has to overcome all these losses.

There are two types of friction losses. One is called viscous friction where the torque required to overcome it is directly proportional to the speed of rotation as shown in Figure 1.7. This type of friction occurs in well-lubricated bearings.

$$\text{Torque, } T_{loss} = B\omega = B\,\frac{d\theta}{dt} \qquad (1.11)$$

where,

B = constant that accounts for friction and windage

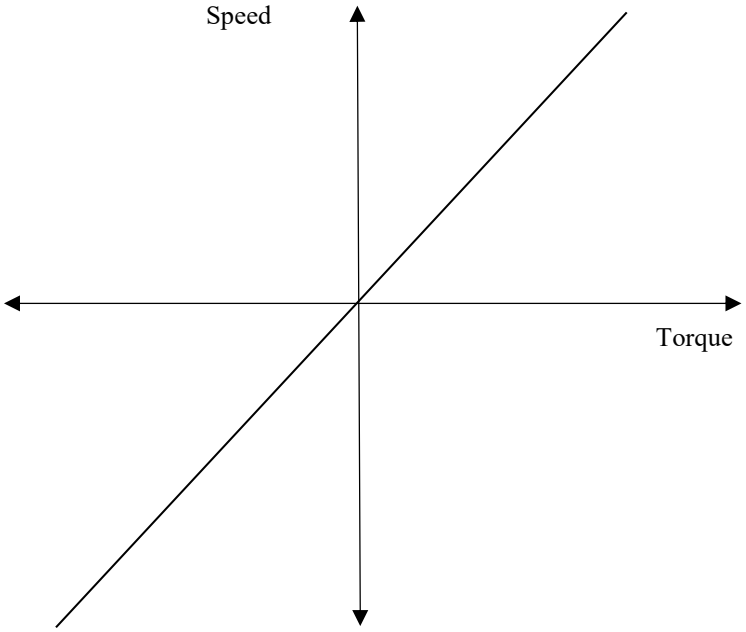

Figure 1.7 Viscous friction

Two other types of friction losses are Coulomb friction and Static friction. Coulomb friction is independent of speed while static friction occurs due to the sticky nature of the surfaces and usually can be ignored as it is very small (Figure 1.8).

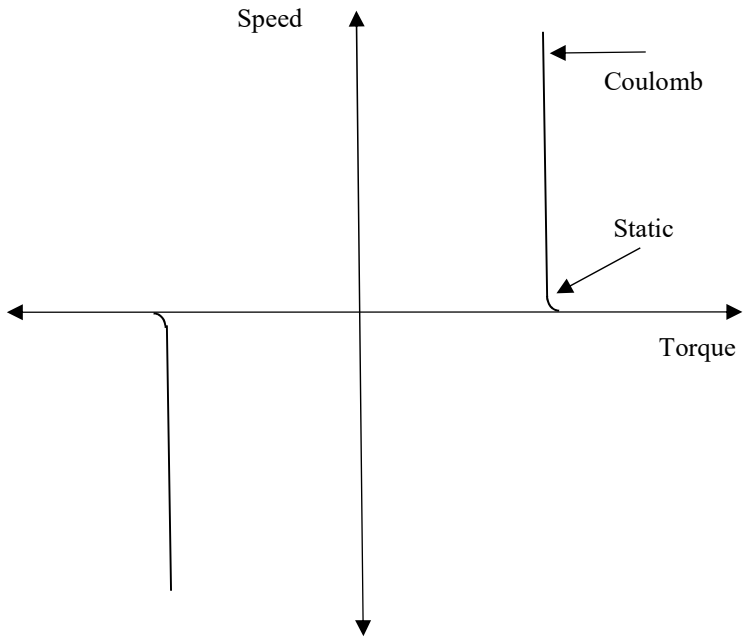

Figure 1.8 Coulomb and Static friction

The combined effect of the different types of friction losses is shown in Figure 1.9.

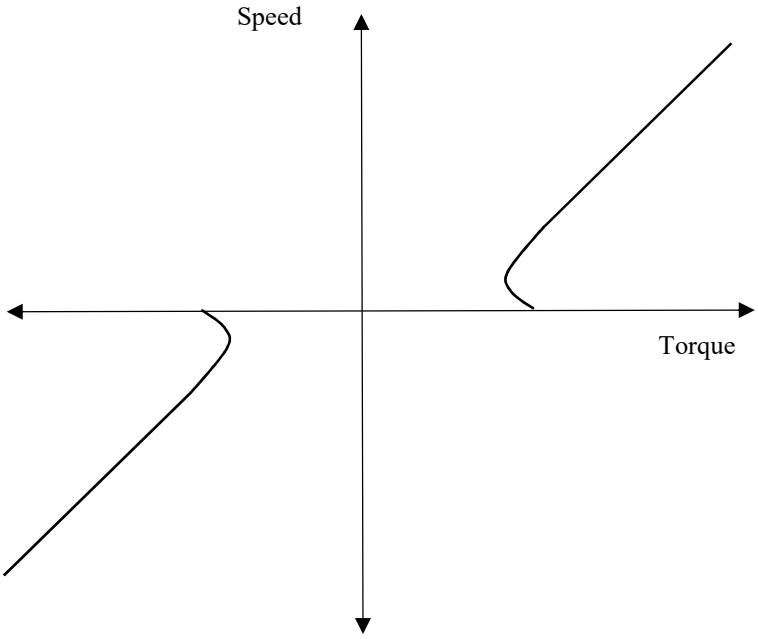

Figure 1.9 Combined losses

Torque required to accelerate load

A motor has to provide the torque necessary to bring the load to the required speed. To do so, the motor has to overcome the inertia of the load, shaft and transmission.

$$T_a = J \frac{d\omega}{dt} = J \frac{d^2\theta}{dt^2} \quad (1.12)$$

where

J = is the inertia of the system

Therefore, the total torque required by the load can be expressed as:

$$T_L = T_w + B\omega + J\frac{d\omega}{dt} \quad (1.13)$$

If T_d is the torque developed by the motor, the torque balance between T_L and T_d can be expressed as follows:

a) $T_d > TL$, the motor will accelerate ($\frac{d\omega}{dt} > 0$)

b) $T_d < TL$, the motor will decelerate ($\frac{d\omega}{dt} < 0$)

c) $T_d = TL$, the motor will run at constant speed ($\frac{d\omega}{dt} = 0$)

Depending on the type of load, during operation, the motor rotation may need a change in direction or brake to bring the load quickly to rest. In general, the operating torque and load can be depicted as a four quadrant operation (Figure 1.10).

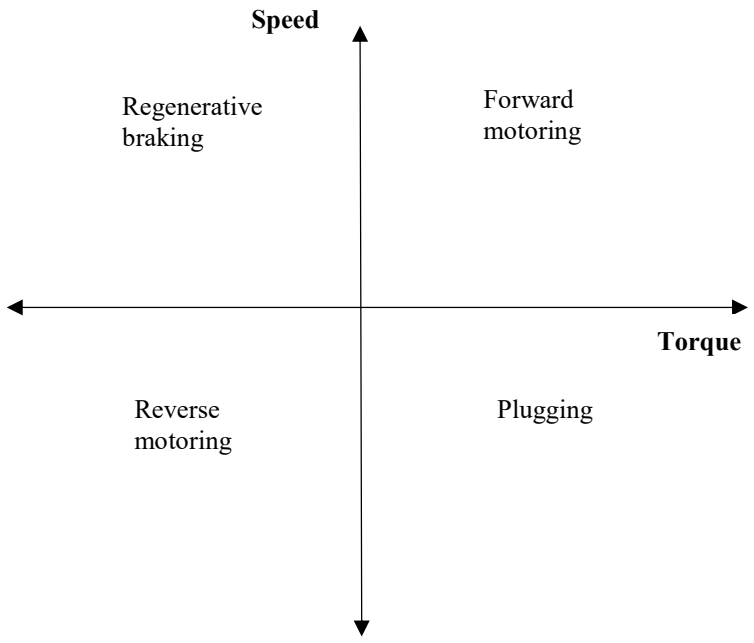

Figure 1.10 Four quadrant operation

The first quadrant represents the operation where the motor draws electrical power to drive the load.

The second quadrant represents regenerative braking where rotational direction is positive but the torque is negative. During such operations, the motor acts as a generator developing a counter torque which opposes the motion. The generated energy can be fed back to the electrical distribution system or dissipated as heat through resistors. The application of regenerative breaking for lifts is discussed later.

The third quadrant represents operations where the motor speed and torque are negative, but power is positive. It is similar to the first quadrant operation with reversed direction of rotation.

The fourth quadrant corresponds to braking in reverse motoring where the motor acts as a brake. When the motor attains a dangerously high speed, the motor develops a torque which opposes the acceleration due to the load.

Pumps, fans and compressors are unidirectional and therefore operate only in the first quadrant. However, equipment such as traction lifts operate in all four quadrants, as shown in Figures 1.11 and 1.12.

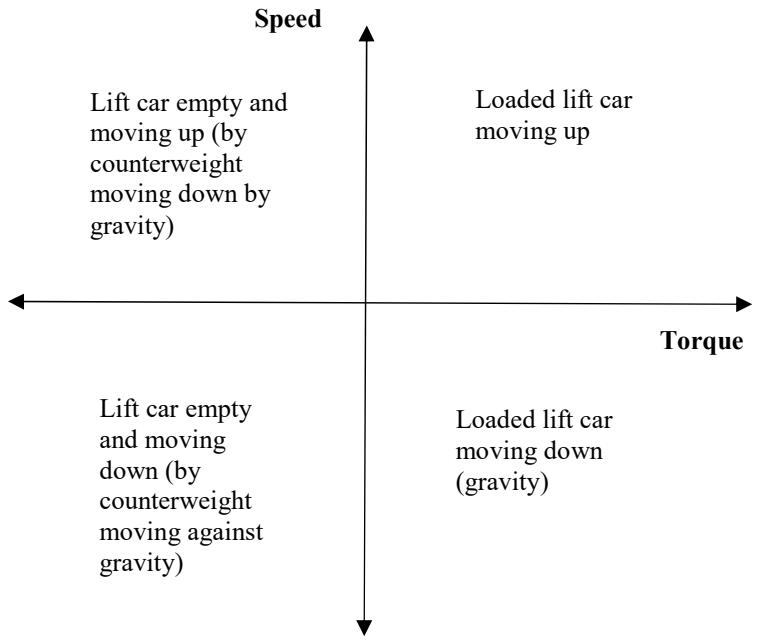

Figure 1.11 Four quadrant diagram for a traction lift

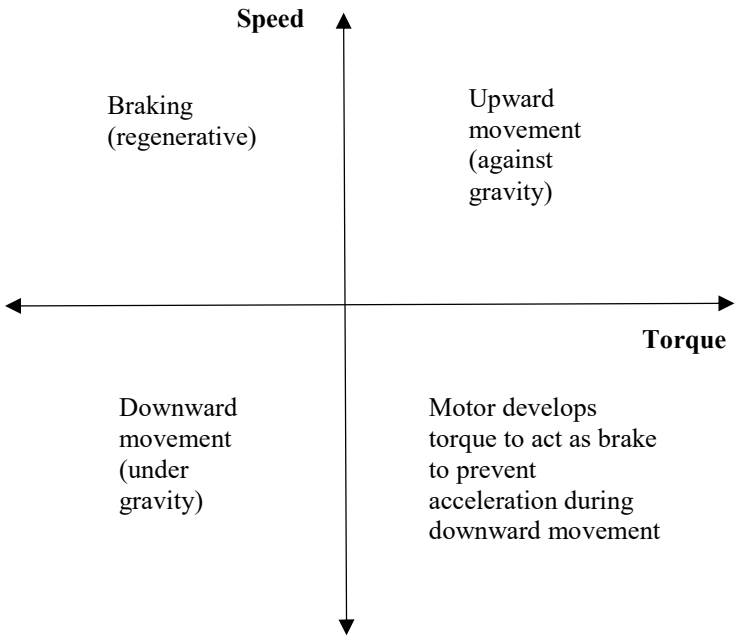

Figure 1.12 Four quadrant diagram for a hoist

Further details on motor selection for various applications are provided in Chapter 2 of this reference manual.

1.3 Overall efficiency of motor driven systems

The overall efficiency of a motor driven system, which is a measure of how much of the electrical power input to the system is converted to useful power output available to do work, is dependent on the efficiency of the individual components.

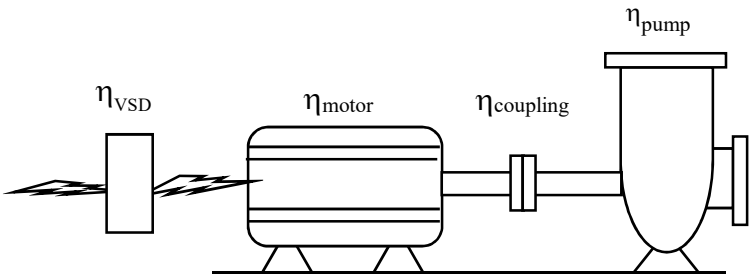

Figure 1.13 Efficiency of individual components

The overall efficiency of the motor driven system,

$\eta_s = \eta_{VSD} \times \eta_{motor} \times \eta_{coupling} \times \eta_{pump}$

The overall system efficiency of typical pump and fan motor driven systems is illustrated in Figure 1.14.

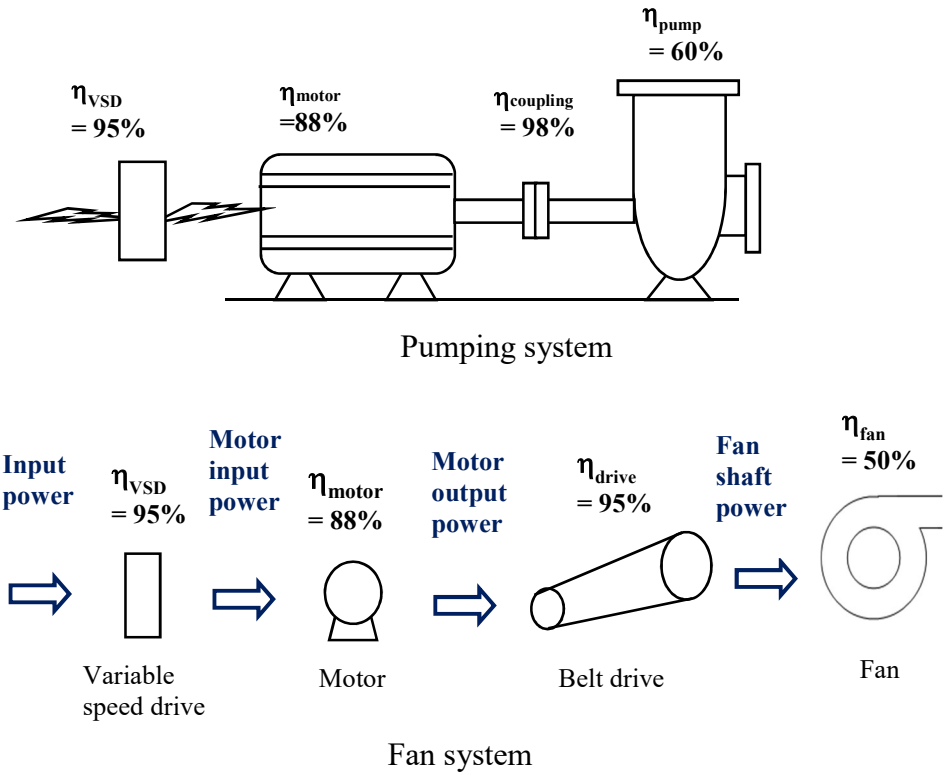

Figure 1.14 Typical efficiency of pumping and fan systems

Therefore, if the individual efficiency of each component is as shown in Figure 1.14, the overall system efficiency is only 49% and 40% for pumping and fan system, respectively. This means that, less than 50% of the input power is converted to useful power (the remaining portion of the input power is wasted as losses).

In addition to the losses in the various components of motor driven system, losses also occur in the systems served by them. Such losses are due to other inefficiencies in the operating system such as the use of throttling devices, excessive flow rates and poor design.

1.4 Power supply to motors

Depending on the type of motor used, the electrical power supply to the motor can be AC (alternating current) or DC (direct current). The majority of motors used in buildings and industrial facilities are AC motors. Where DC motors are used, AC power from the mains is converted to DC power. In alternating current circuits, the electric charge changes direction periodically. The voltage in AC circuits also

periodically reverses because the current changes direction. However, in the case of direct current (DC), the electric charge (current) only flows in one direction.

Often the terms power and energy are used interchangeably to express electricity used by motors. However, the two parameters are different.

Power is the rate at which work is performed and the unit of Watt (W) is used. It is also the same as 1 J/s (Joule per second). On the other hand, energy is the amount of work done over a period of time and the unit is kilowatt-hour (kWh).

Therefore, an instantaneous measurement of energy consumed by a motor will provide the power, which is the rate at which it is generating work while a reading taken over time will provide the total work done over that time period.

Single phase and three phase supply

AC power can be supplied as single phase or three phase. In a single phase system, one conductor carries the current while the other acts as the neutral. In three phase circuits, three current carrying conductors are used and the current and voltage in each conductor is 120 degrees apart as shown in Figure 1.15.

The power supplied by a single phase circuit peaks every 180 degrees when the voltage and current reach the +ve and –ve peak values. The power supplied by three phase systems are smoother as the wave forms for the three different phases reach the peak at different times. Generally, single phase supply is used for motors rated up to about 3.7 kW.

Power

Power is the product of voltage and current ($P = V \times I$). However, this is applicable only for circuits with only resistive loads.

Motor windings are inductive coils and have two components of power. One is the actual power absorbed by the motor to do useful work called real power (or active power) and the other, the reactive power, is used for magnetising the magnetic elements. The apparent power is the vector sum of the reactive and active power and is normally computed in kVA (product of volts and amperes divided by 1000).

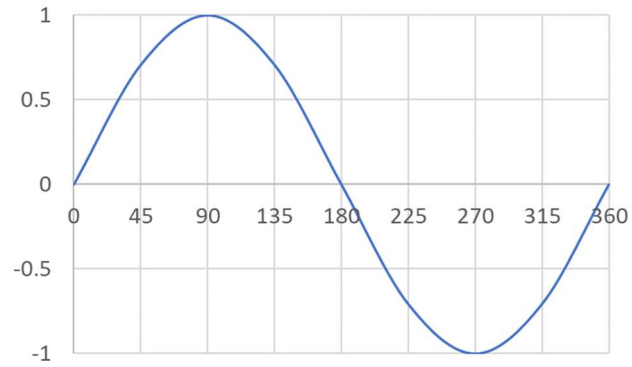

Single phase

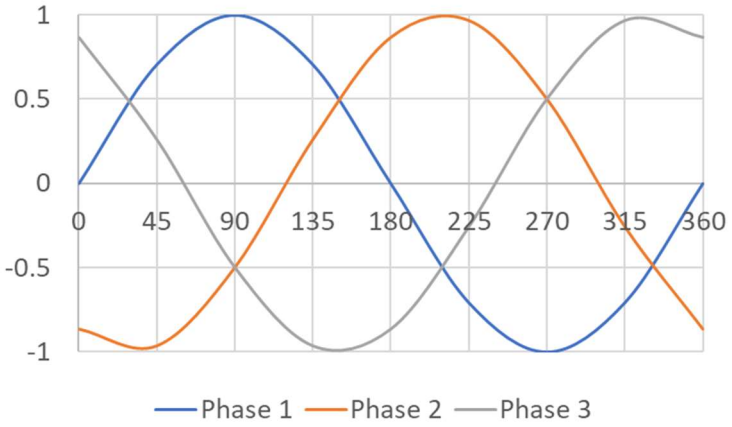

Three phase

Figure 1.15 Single phase and 3-phase power

Power factor is the ratio of active power to the apparent power. The power factor ranges from zero to 1.0. The highest power factor of 1.0 is achieved if there is no reactive power as in the case of totally resistive loads.

$$\text{Power factor, PF} = \cos\theta = \frac{\text{Active power (kW)}}{\text{Apparent power (kVA)}} \qquad (1.14)$$

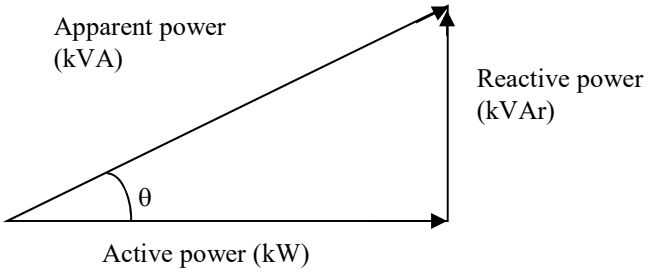

Figure 1.16 – Vector diagram for power

Therefore, Active Power (kW) = Apparent Power (kVA) x PF

For a three phase motor, the power consumed will be the sum of the power for each phase.

Power for each phase, $W_{phase} = V_{phase\text{-}neutral} \times I_{phase} \times PF$

If the power supply is balanced for the three phases, total power can be taken as $W_{total} = 3 \times (V_{phase\text{-}neutral} \times I_{phase} \times PF)$

Since, $V_{phase\text{-}phase} = \sqrt{3} \times (V_{phase\text{-}neutral})$

$W_{total} = 3 \times (V_{phase\text{-}phase} / \sqrt{3}) \times I \times PF$

$= \sqrt{3} \times (V_{phase\text{-}phase} \times I \times PF)$

where, $V_{phase\text{-}phase}$ = mean of phase-to-phase voltages for the three phases
I = mean of the three phase currents
PF = mean power factor for the three phases

Example 1.2

The following data has been measured for a motor using a power meter for the three phases a, b and c. Compute the input power to the motor.

V_{ab} = 414 volts	I_a = 50 amps	PF_a = 0.87
V_{bc} = 415 volts	I_b = 49 amps	PF_b = 0.89
V_{ca} = 413 volts	I_c = 51 amps	PF_c = 0.88

Solution

Mean of phase-to-phase voltages = (414 + 415 + 413) / 3
= 414 volts

Mean of phase currents = (50 + 49 + 51) /3
= 50 amps

Mean power factor = (0.87 + 0.89 + 0.88) / 3

= 0.88

Input power to motor = (√3 x 414 x 50 x 0.88) / 1000
= 31.55 kW

Supply voltage

The performance of motors depends on the supply voltage. Therefore, motors are rated to operate at a particular supply voltage (or a range). If the supply voltage deviates by more than ±10% from the rated voltage, it can significantly affect the performance of the motor.

If the supply voltage to the motor is below the rated value, higher current will be drawn by the motor to produce the torque required by the load. On the other hand, when the supply voltage increases, the magnetising current increases, leading to saturation of the core iron, overheating and higher current draw. Hence, both lower and higher supply voltages result in higher resistance (I^2R) losses for the stator and rotor of the motor and a drop in motor efficiency as shown in Figure 1.17. From the figure, it should also be noted that motor torque varies based on the square of the applied voltage. Therefore, a 10% drop in voltage results in a torque reduction of about 20%.

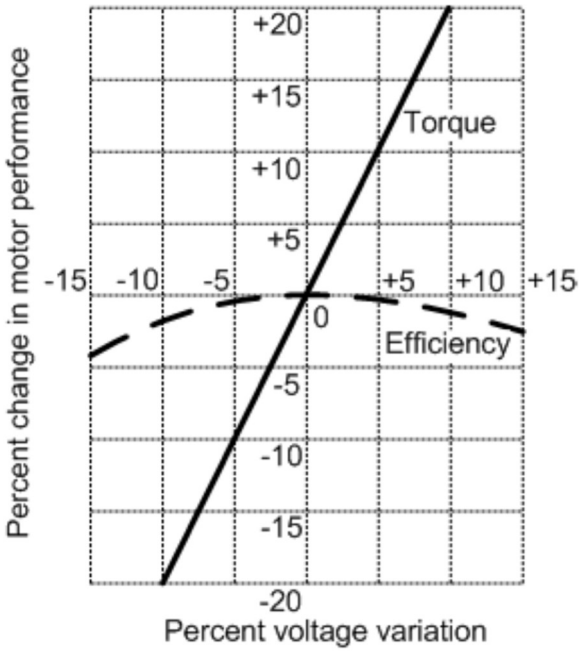

Figure 1.17 Variation in torque and motor efficiency

In addition, unbalance in voltage between the different phases could also occur. Voltage unbalance at the motor windings causes the phase currents to be unbalanced, resulting in higher losses, overheating of the motor and reduced life.

It is generally recommended that the voltage unbalance between the phases should be less than 1%. If the unbalance in voltage is more than 1%, derating of motors is required to avoid damaging them.

NEMA (National Electrical Manufacturers Association), defines voltage unbalance as follows:

$$\text{Voltage deviation } \% = \frac{\text{Maximum voltage deviation from the mean of 3 phases}}{\text{Average voltage}} \times 100 \quad (1.15)$$

Example 1.3

Compute the voltage deviation based on the following data measured for the three phases.

V_{ab} = 414 volts V_{bc} = 415 volts V_{ca} = 413 volts

Solution

Mean of three phases = (414 + 415 + 413) / 3
= 414 volts

Maximum deviation from the mean of 3 phases = (415 – 414) = 1 volt

Voltage deviation % = (1 / 414) x 100
= 0.24%

Power factor

As described earlier, power factor is the ratio of the real power to the apparent power. Induction motors typically operate at power factor of about 0.85. A low power factor leads to higher line losses, in addition to resulting in penalty charges from the utility companies. When the power factor is low, higher line currents are required to meet the real power load, resulting in higher resistance (I^2R) losses.

Poorly loaded motors, due to oversizing or during idling can also have low power factor. Since power factor is the ratio of active power to apparent power, it can also be expressed as the ratio of active power to the vector sum of the active power and reactive power.

$$\text{Power factor, PF} = \frac{\text{Active power (kW)}}{\text{Active power (kW)} + \text{Reactive power (kVAr)}} \quad (1.16)$$

At low loading, the active power drops but the reactive power remains almost constant, resulting in lower power factor.

A low power factor can be improved by installing capacitors in parallel to the load to reduce the reactive power as shown in Figure 1.18.

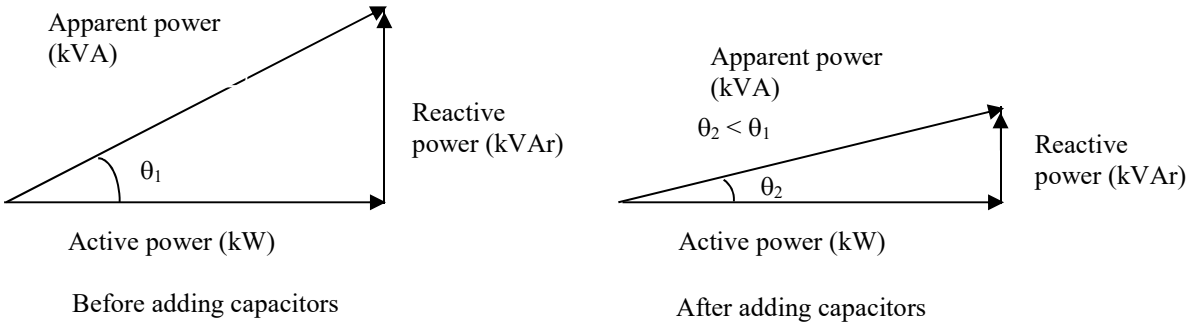

Figure 1.18 Vector diagrams showing improvement in power factor

The power factor correction can be “static correction” where capacitors are connected at each load (Figure 1.19) or “bulk correction” where capacitors are connected at the distribution boards (Figure 1.20).

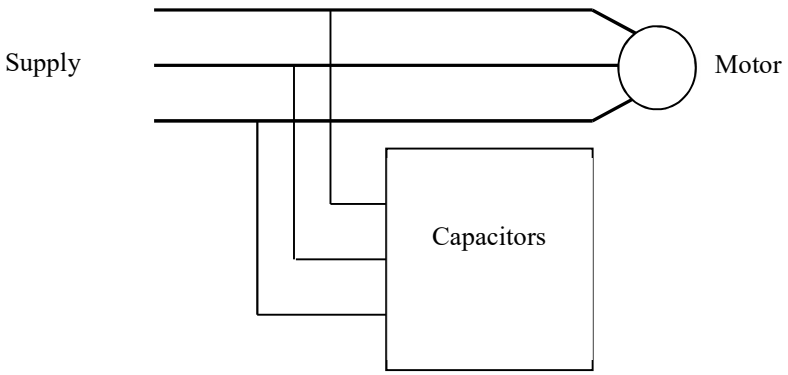

Figure 1.19 – Static power factor correction

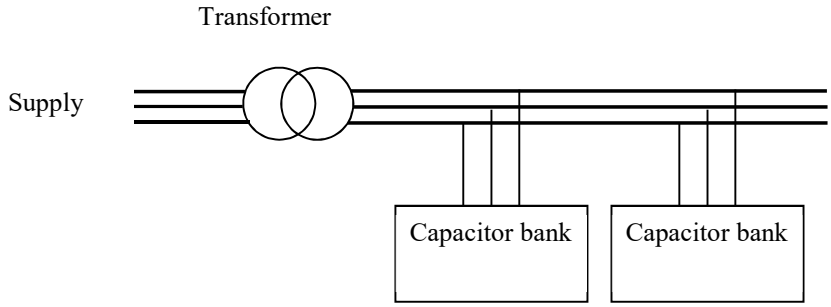

Figure 1.20- Bulk power factor correction

Power factor correction equipment connected in parallel can cause an increase in voltage at the connection point. This increase in voltage could be due to either the presence of harmonics in the network or a leading power factor or both. Such increases in voltage causes unnecessary stress on equipment. In addition, if the power factor correction equipment (capacitor) is connected to the motor and is oversized, when the motor is just switched off, the inertia of the motor can cause it to operate as a self-excited generator (self-excitation occurs because the capacitive reactive current from the capacitor is greater than the magnetising current of the motor).

Example 1.4

Consider an industrial plant which is operating at 1,500 kW and 1,850 kVA. Estimate the present power factor. Thereafter, calculate the kVAr rating of a suitable capacitor that should be added to improve the power factor to 0.9.

Solution

Before power factor correction (refer to Figure 1.21)

Active power = 1,500 kW

Apparent power = 1,850 kVA

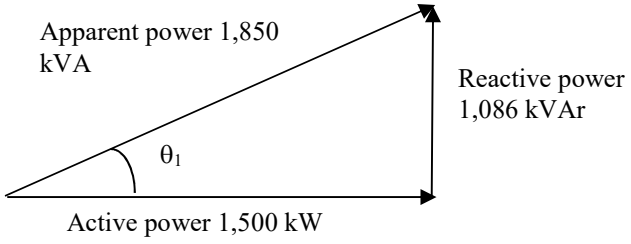

Figure 1.21 Vector diagram before power factor correction

Power factor = Active power / Apparent power

Power factor, cos θ_1 = 1,500 / 1,850 = 0.81

θ_1 = 35.9°

tan θ_1 = Reactive power / Active power

Therefore, Reactive power = tan θ_1 x Active power
= tan(35.9°) x 1,500
= 1,086 kVAr

After power factor correction (refer to Figure 1.22)
Power factor = Active power / Apparent power

Therefore, Apparent power = Active power / power factor
= 1,500 kW / 0.9
= 1,667 kVA

$\theta_2 = \cos^{-1}(0.9) = 25.8°$

Reactive power = tan(25.8°) x 1,500 = 725 kVAr

Therefore, size of capacitor required = 1,086 – 725 = 361 kVAr (capacitive)

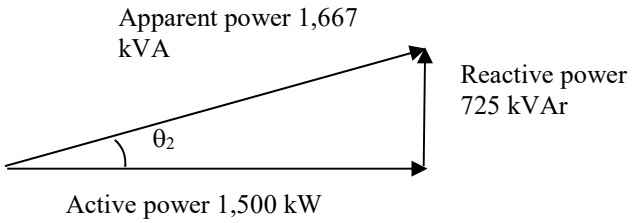

Figure 1.22 Vector diagram after power factor correction

1.5 Improving efficiency of motor driven systems

Generally, there are two approaches to improving the energy efficiency of motor driven systems, which are (a) improving the efficiency of the different components in the system, and (b) improving the system as a whole.

Examples of improving efficiency of individual components can include replacing an inefficient motor, pump or fan with a more efficient one. Figure 1.23 shows the system efficiency improvement achieved by changing a pump to a more efficient one.

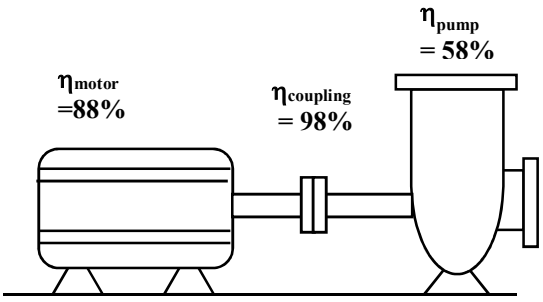

Inefficient pump

System efficiency = 0.88 x 0.98 x 0.58 = 0.5 (50%)

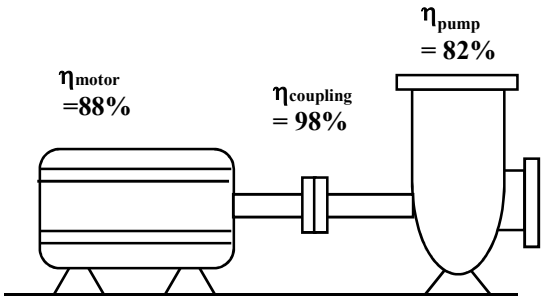

Efficient pump

System efficiency = 0.88 x 0.98 x 0.82 = 0.7 (70%)

Figure 1.23 Replacing an inefficient pump with a more efficient pump

On the other-hand, improving the efficiency of the entire system involves not only considering the individual component efficiencies, but also other factors such as the quality of power supplied to the motor, loading of the motor to ensure best operating efficiency, and optimising the system design to minimise energy wastage caused by overcapacity, throttling, etc.

Figure 1.24 shows an example of a system level optimisation for a pumping system where, in addition to replacing the pump, the flow rate is reduced by 10% and the pressure developed by the pump is reduced by 20% by opening the throttled valve.

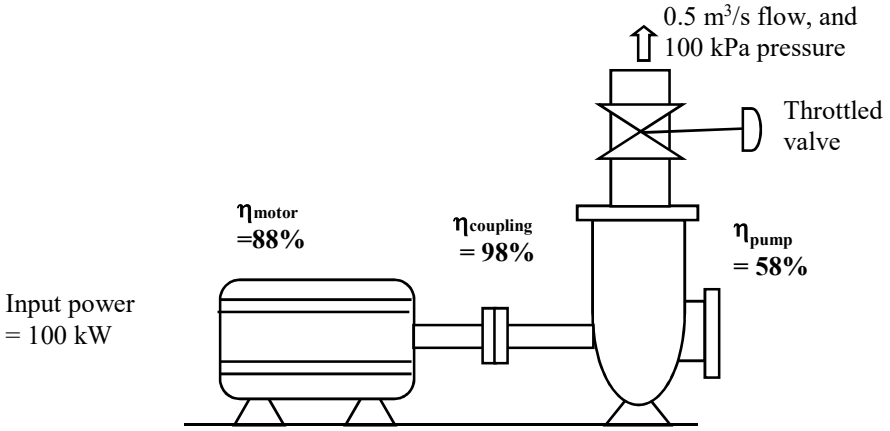

Inefficient pumping system

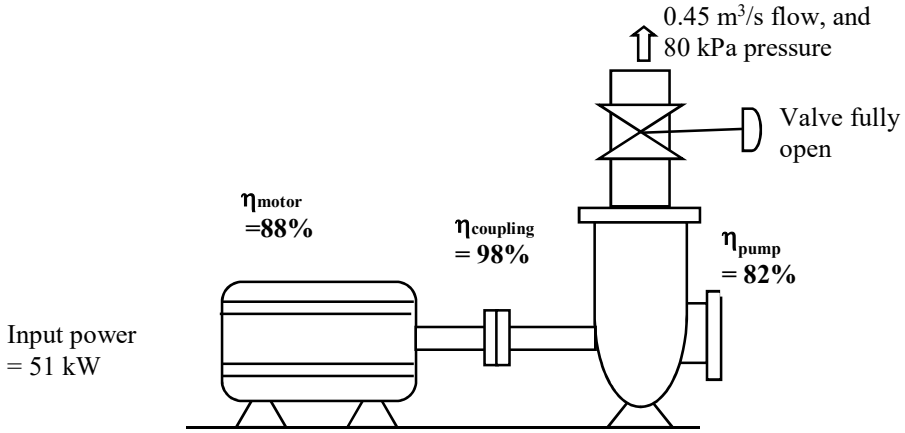

Optimised pumping system

Figure 1.24 Illustration of a system level improvement for a pumping system

The above example shows that energy savings of about 50% can be achieved by optimising the entire pumping system. This is often the case for most motor driven systems like, pumps, fans and compressors. The subsequent chapters of this reference manual illustrate the various opportunities for optimising motor driven systems.

Summary

Various motor driven systems are used in buildings and industrial facilities and include pumps, fans, compressors and vertical transportation systems. There is significant potential to enhance the operating efficiency of motor driven systems by both

component level and system level improvements. These will be described in detail in the subsequent sections of this reference manual.

References

1. Energy-efficiency policy opportunities for electric motor-driven systems http://www.iea.org/publications/freepublications/publication/EE_for_ElectricSystems.pdf.
2. Improving motor and drive system performance: A source book for industry, US DOE, 2008.
3. Jayamaha, Lal, Energy-Efficient Industrial Systems, Evaluation and Implementation, McGraw-Hill, New York, 2016.
4. NEMA (National Electrical Manufacturers Association), Standards Publication MG1, 2006.
5. Subrahmanyam, V, Electric Drives, Concepts and Applications, McGraw-Hill, New Delhi, 2013.

2.0 MOTORS

Electrical motors are devices that convert electrical energy into mechanical work. They mainly consist of a stator (stationary winding), rotor (rotating winding) and an enclosure. The main types of motors used in buildings and industrial plants can be classified as AC (alternating current) and DC (direct current) motors based on the type of electrical supply used. These motors can be further categorised as shown in Figure 2.1.

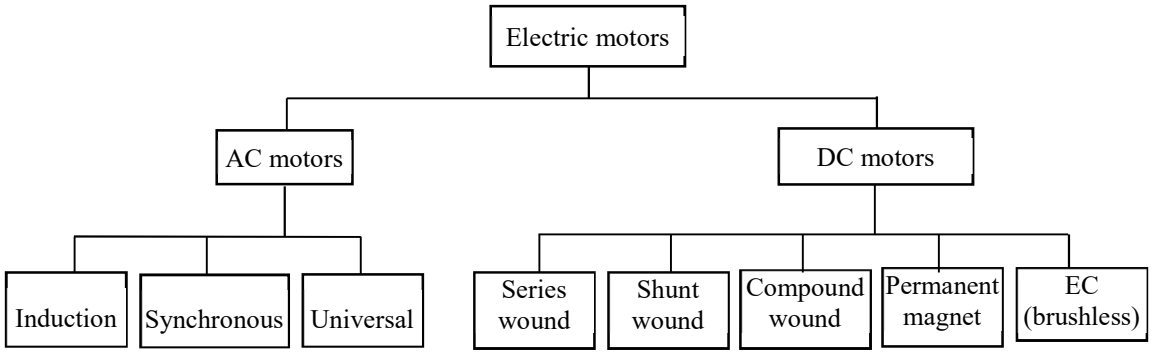

Figure 2.1 Types of electric motors

This chapter provides an introduction to motors and describes the different types of motors available in the market, followed by key motor characteristics and design features of each type of motor.

Learning Outcomes:

The main learning outcomes from this chapter are to understand:

1. How motors work
2. The different types of motors available in the market
3. Important characteristics of motors
4. Factors to consider when selecting a motor for a particular application

2.1 AC induction motors

In AC induction motors, an alternating current applied to the stator creates a magnetic field in the stator winding. When the lines of flux cut the conductors of the rotor, a current is induced in the rotor, creating a magnetic field which opposes the magnetic field in the stator, resulting in rotation of the rotor. AC induction motors can be single phase or three phase.

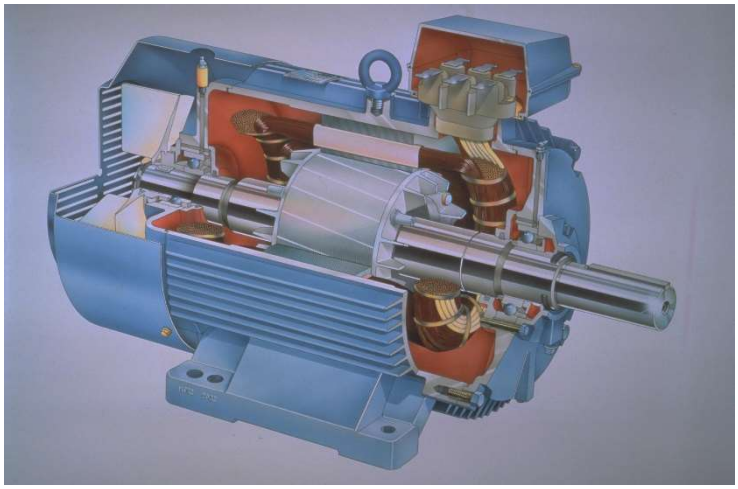

Figure 2.2 AC induction motor (courtesy of ABB)

The most common type of rotor used in AC induction motors is the “squirrel cage”, which has aluminum or copper rotor bars joined at the ends by end rings (Figure 2.3). The rotating magnetic field in the stator induces a voltage in the rotor bars, which causes a current to flow through them. The rotor currents then generate a magnetic field, which interacts with the field in the stator. The torque developed by the rotor depends on the resistance of the rotor. A high resistance results in high starting torque and vice-versa.

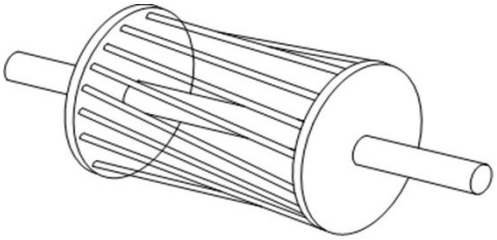

Figure 2.3 Squirrel cage rotor

The other common type of rotor is the “wound rotor” where wires are wound into rotor slots and are connected to external resistors through slip rings, as shown in Figure 2.4. The resistors are variable and are used to alter the rotor resistance and thereby vary motor speed and torque.

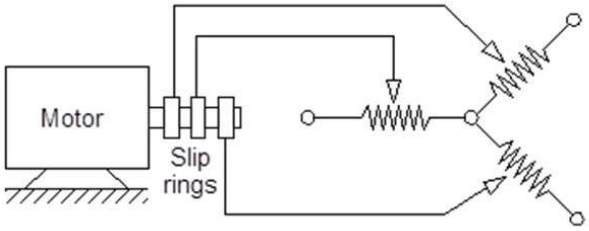

Figure 2.4 Arrangement of a wound rotor with slip rings

Squirrel cage rotors are generally preferred due to lower cost, whereas wound rotor motors are used for applications which require a higher starting torque and speed variation.

Speed of motors

The speed of motors depends on the number of poles and frequency of the power supply and can be expressed as follows:

Synchronous speed (rpm) = (120 x power supply frequency in Hz) / (number of poles in the motor)

Example 2.1

Compute the synchronous speed for a 4-pole motor operating on 50 Hz power supply.

Solution

Synchronous speed = (120 x 50) / 4
= 1500 rpm

Slip in motors

The actual operating speed of induction motors is less than the synchronous speed. The difference is called “slip”. If the rotor rotates at the same speed as the stator magnetic field, the rotor conductors will appear to be “standing still” with respect to the rotating field and no voltage will be induced in the rotor conductors (no current to produce torque). Normal-slip motors are designed for a slip of about 5%. Motors with high starting torque are designed for a slip of up to 20%.

The relationship between operating motor speed and load is illustrated in Figure 2.5.

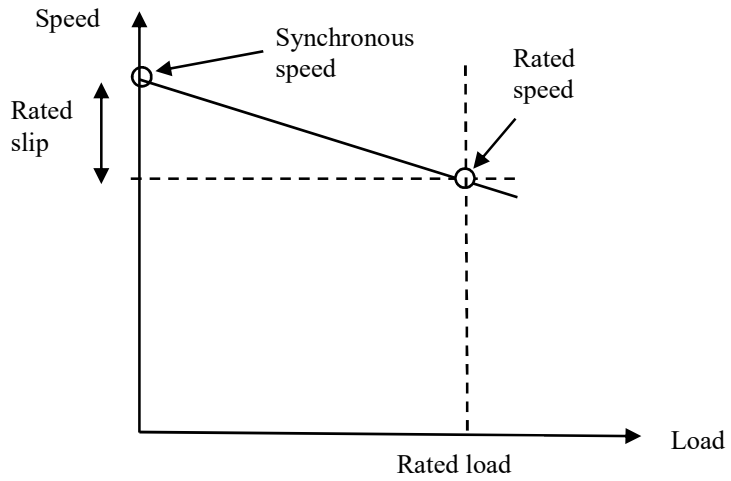

Figure 2.5 Motor operating speed vs load

Slip in motors can be expressed as follows:

Slip (%) = [(Synchronous speed – full load speed) / (Synchronous speed)] x 100

Example 2.2

Compute the percentage of slip for a 4-pole motor operating on 50 Hz power supply when the full load motor speed is 1440 rpm.

Solution

Synchronous speed (from Example 2.1) = 1500 rpm

Motor speed at full load = 1440 rpm

Slip = [(1500 – 1440) / 1500] x 100

= 4%

Classifications of AC induction motors

AC induction motors can also be classified according to their design characteristics. NEMA classification of induction motors is normally based on torque characteristics, starting current and slip, into designs A, B, C, D and E (Table 2.1).

As a motor operates from no load to full load, its torque varies with speed. A typical load vs torque characteristic for an AC induction motor is shown in Figure 2.6. When a motor starts from rest, the torque generated is the locked rotor torque (starting

torque). This is followed by the pull-up torque (accelerating torque), which is the minimum torque developed when a motor accelerates from rest. When the motor accelerates to the maximum speed at which it can operate (synchronous speed), the maximum torque that can be developed by the motor at the rated voltage and frequency without an abrupt drop in speed is called breakdown torque.

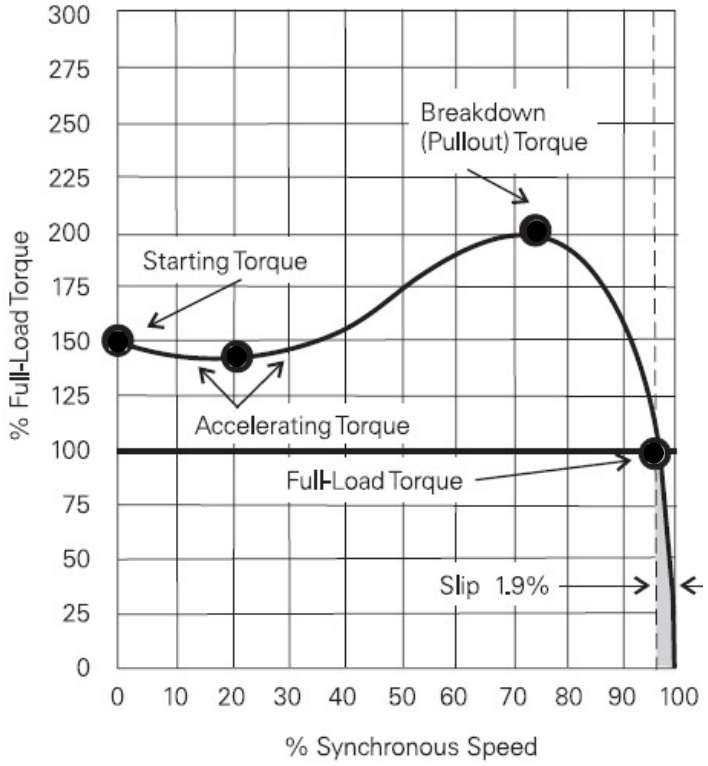

Figure 2.6 Typical load vs speed characteristic for an AC induction motor

Design	Starting torque	Starting current	Full load slip	Efficiency	Typical applications
A	Normal	High	Low	High / medium	Machine tools, centrifugal fans and pumps
B	Normal	Normal	Normal	High / medium	Same as Design A
C	High	Normal	Normal	Medium	Compressors, conveyors, crushers, reciprocating pumps, agitators
D	Very high	Low	High	Low	Punch presses, shears, elevators, extractors, winches, hoists
E	Normal	Normal	Low	High	Same as Design A

Table 2.1 Motor characteristics for different motor designs (Reprinted from NEMA Standard MG1-2016 by permission of the National Electrical Manufacturers Association)

Motors classified according to the various designs have different torque vs speed characteristics and are illustrated in Figure 2.7.

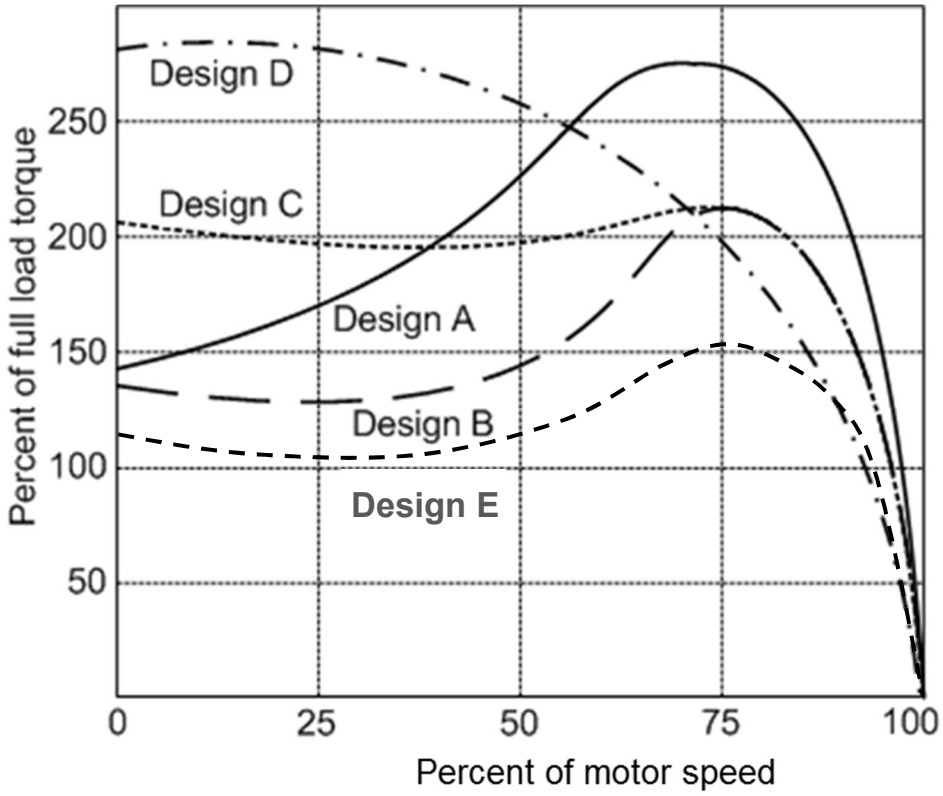

Figure 2.7 Typical torque vs speed characteristics

The relationship between stator current and speed is shown in Figure 2.8.

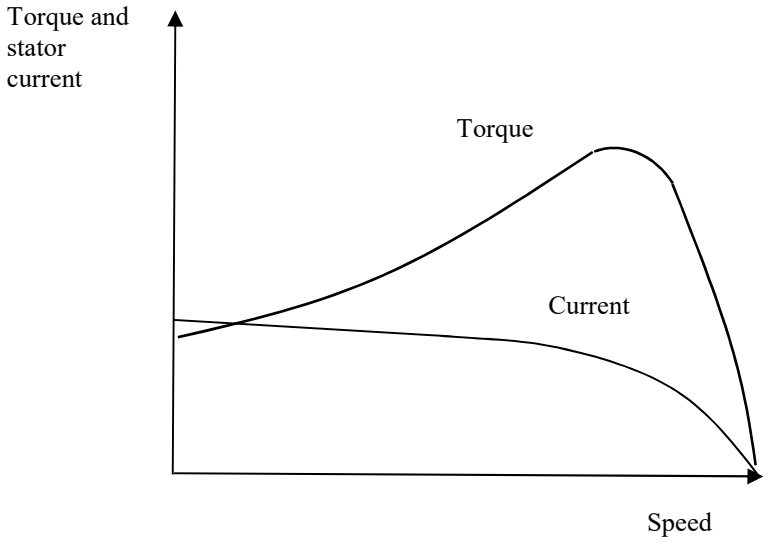

Figure 2.8 Stator current vs speed characteristics

2.2 DC motors

In DC motors, direct current is passed through a rotor wire placed between wound or permanent magnets of the stator. DC current is supplied to the rotor (while it is rotating) through a set of contacts, called commutator, which are in contact with stationary conductors called brushes. The electricity flow through the rotor coil creates a magnetic field. The direction of the flow of current is changed twice every cycle, which changes the polarity of the rotor electromagnet. The rotor magnetic field interacts with the wound or permanent magnet of the stator which makes the rotor spin. A typical DC motor is shown in Figure 2.9.



Figure 2.9 Arrangement of a DC motor (courtesy of ABB)

DC motors are generally more expensive than AC induction motors because of the need for a commutator, brushes and rotor winding. They are generally used only for special applications such as lifts and cranes which require precise speed and torque control.

DC motors are generally classified as shunt-wound, series-wound or compound-wound, based on the connection between the armature (rotor) and field (stator) winding.

Equivalent circuit of a DC motor

The armature resistance and back-emf generated by a DC motor rotor can be represented as an equivalent circuit as shown in Figure 2.10, where V_T is the applied voltage, R_A is the armature resistance, I_A is the armature current, and E_A is the back-emf.

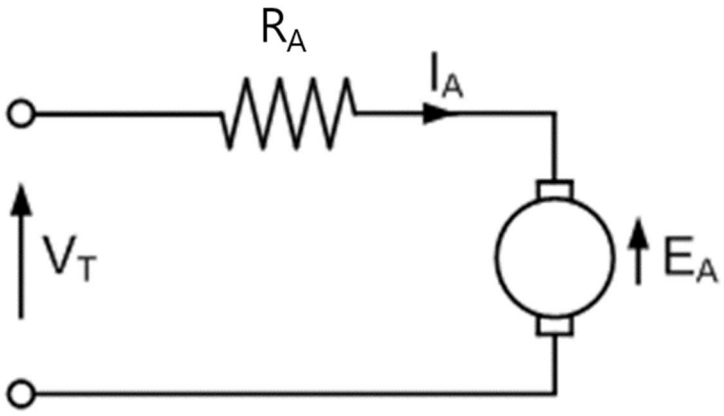

Figure 2.10 Equivalent circuit of a DC motor rotor

From Lenz's law,

$E_A = pz\Phi\omega/2\pi = (pN\Phi z)/60$ (2.1)

where, p =number of poles

z = no of conductors

Φ = flux per pole

ω = angular speed

N = rotational speed in revolutions per minute (rpm)

Example 2.3

The applied voltage and armature resistance are 120 V and 1.5 Ω respectively. The back-emf is 50 V at 400 rpm. Calculate the starting current and the armature current when the rotor is operating at 800 rpm.

Solution

When starting, N=0, $E_A = 0$

Therefore, $I_A = V_T / R_A = 120 / 1.5 = 80$ A

At 800 rpm,

$E_A \propto N$

$E_{A2} = (N_2/N_1) \times E_{A1} = (800 / 400) \times 50 = 100$ V

$I_{A2} = (V_T - E_{A2}) / R_A = (120 - 100) / 1.5 = 13.3$ A

From equation (2.1), $E_A \propto N \Phi$

and $V_T - E_A = I_A R_A$ (by considering the potential difference driving the current in Figure 2.10)

Therefore, the speed can be expressed as, $N = k \frac{(V - I_A R_A)}{\emptyset}$

Since $T \propto I_A . \Phi$, speed can also be expressed as,

$$N = k \left[\left(\frac{V}{\emptyset}\right) - \left(\frac{T R_A}{\emptyset^2}\right)\right]$$

Therefore, when torque is zero, the no load speed can be expressed as,

$$N = k \left(\frac{V}{\emptyset}\right)$$

Figure 2.11 shows the speed vs torque relationship.

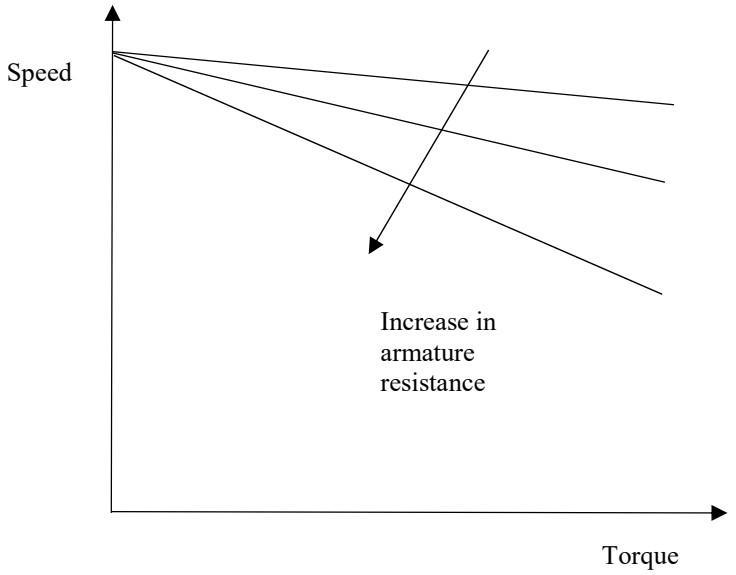

Figure 2.11 Speed vs torque characteristic

Power

Power can be expressed as, $P = V_T \times I_A$

$= (E_A + I_A \times R_A) \times I_A$

$= ((E_A \times I_A) + (I_A^2 \times R_A))$

Since the term $(I_A^2 \times R_A)$ represents the resistance losses in the armature, the remaining term represents the useful power available for producing the output power.

Therefore, useful power $P = E_A \times I_A$

Also, power P = Torque x ω

Therefore, Torque, $T = P/\omega = (E_A \times I_A) / \omega$

Since $E_A = pz\Phi\omega/2\pi$

$T = ((pz\Phi\omega/2\pi) \times I_A) / \omega$

$= pz\Phi I_A /2\pi$

Hence, T is proportional to Φ and I_A

Therefore, DC motors can be controlled by varying the armature current (or the armature voltage which changes the armature current) and field current.

Changing armature current, I_A

Changing of armature current, I_A can be achieved by having a variable resistor R_s, which when increased, will reduce both I_A and ω.

Power, $P = V_T \times I_A$

$= (E_A + I_A \times (R_A + R_s)) \times I_A$

$= ((E_A \times I_A) + (I_A^2 \times (R_A + R_s)))$

However, this method of motor control is not preferred due to the resulting increase in resistance losses, represented by the additional term ($I_A^2 \times R_s$).

Changing armature voltage, V_T

Since $I_A = (V_T - E_A) / R_A$

If V_T is reduced, I_A will also reduce which will in-turn reduce ω.

Changing field current, I_F

The equivalent circuit of a DC motor with the field (stator) is shown in Figure 2.12.

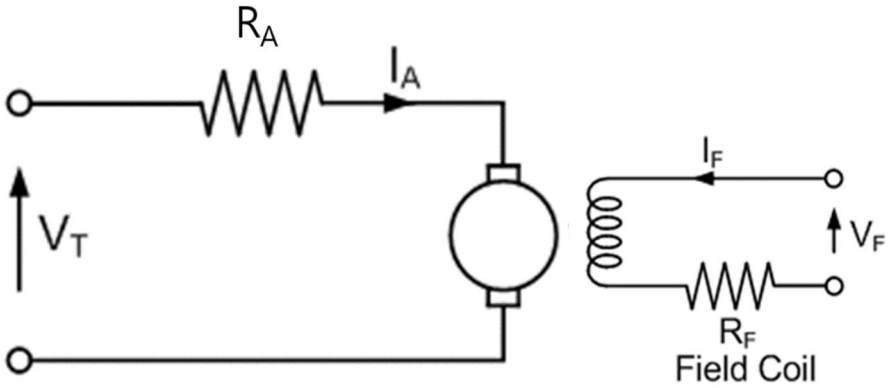

Figure 2.12 Equivalent circuit of a DC motor

Torque T generated by the motor is proportional to flux Φ. The flux Φ generated depends on the field current, which in turn depends on the field voltage. Therefore, the motor capacity can also be varied by the field coil.

Field and armature excitation can be in series, shunt or compound.

Series wound

In series-wound DC motors, current flows in series through both the field and armature windings as shown in Figure 2.13. Such motors have low-resistance field and armature circuits.

When the starting voltage is applied, the high current in the winding results in a strong magnetic field and therefore a high starting torque.

Series-wound DC motors are used for applications such as cranes and hoists which have high starting loads. Therefore, this type of motor cannot be used for applications which require constant speed operation under variable load conditions.

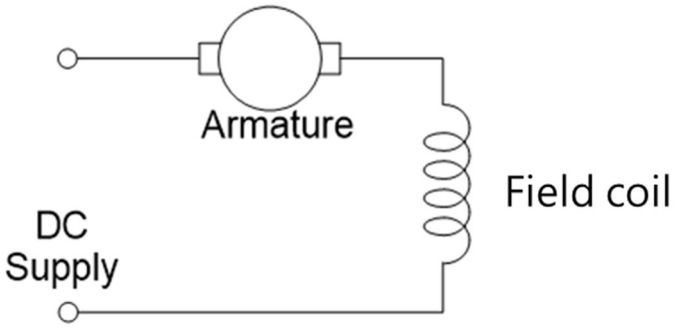

Figure 2.13 Arrangement of series-wound DC motors

The equivalent circuit for a series-wound DC motor is shown in Figure 2.14.

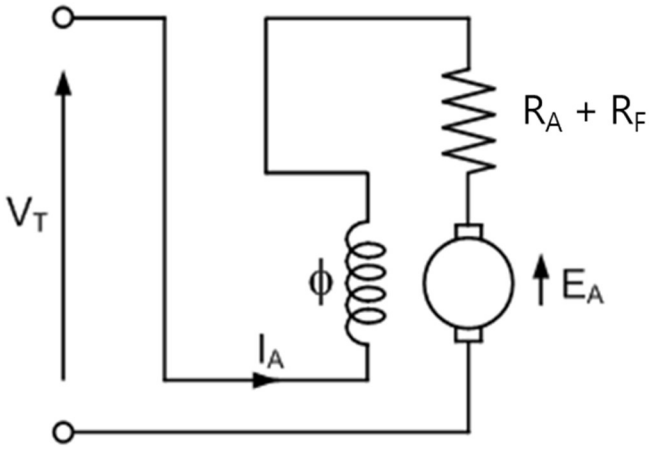

Figure 2.14 Equivalent circuit for a series-wound DC motors

$V_T = E_A + I_A \times (R_A + R_F)$

Since Torque, T is proportional to flux, Φ and armature current, I_A, and flux, Φ is also proportional to I_A.

Torque, T is proportional to I_A^2

Since, Power, $P = T \times \omega$, if power is constant, $T \propto 1/\omega$

Therefore, $I_A^2 \propto 1/\omega$ or $I_A \propto 1/\sqrt{\omega}$

The relationships between torque and speed with armature current is shown in Figure 2.15.

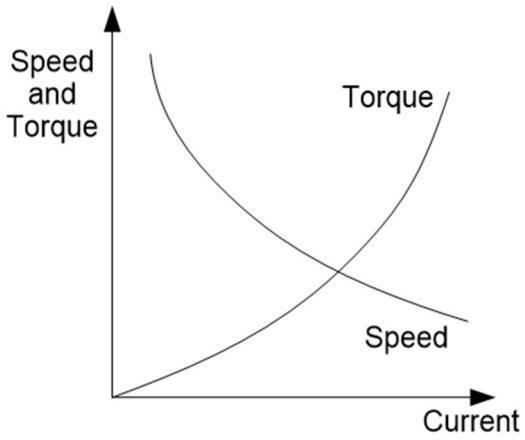

Figure 2.15 Speed-torque characteristic for series DC motors

The effect of the variation of the field current on the speed torque characteristic is shown in Figure 2.16. When the armature voltage reaches its rated value and the field current is decreased to achieve speeds above the base speed, field weakening occurs. Speed twice the base speed can be achieved by this operation. This mode is best suited for constant power applications, since the armature current can be maintained at its rated value. It cannot be used to drive constant torque loads as the motor draws increased current when speed increases.

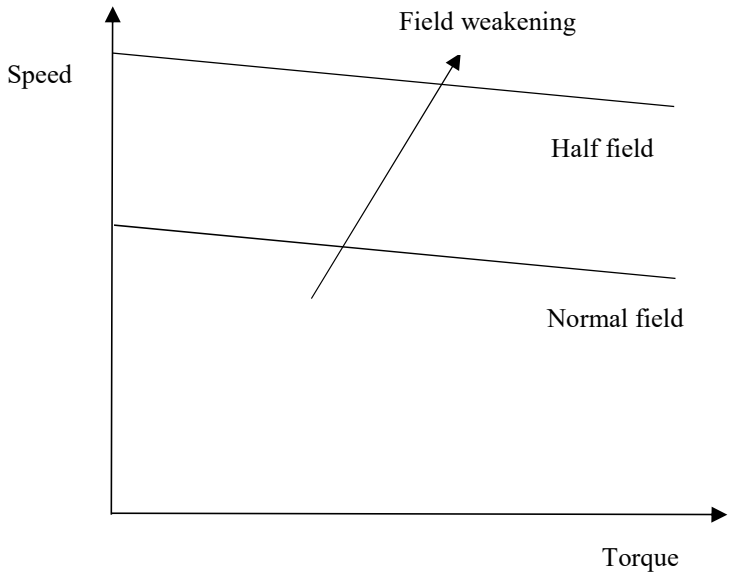

Figure 2.16 Effect of field weakening on speed-torque characteristic

Example 2.4

A series-wound DC motor has an armature resistance of 0.5 Ω and field winding resistance of 2.5 Ω. In driving a certain load, the current drawn by the motor is 18A from a voltage source of V_T = 200V. The rotational mechanical loss is 100 W. Find the output power and efficiency.

Solution

Total input power, $P_{in} = V_T \times I_A = 200 \times 18 = 3600$ W

Back-emf, $E_A = V_T - (R_F + R_A) \times I_A$

$= 200 - (2.5 + 0.5) \times 18 = 146$ V

Power developed (by the rotor), $P_{dev} = E_A \times I_A$

$= 146 \times 18 = 2628$ W

Power delivered to the load, $P_{load} = P_{dev} - P_{drive} = 2628 - 100 = 2528$ W

Therefore, efficiency $\eta = (P_{out} / P_{in}) \times 100\%$

$= (2528 / 3600) = 70\%$

Shunt-wound

In shunt-wound DC motors, the field and armature windings are connected in parallel as shown in Figure 2.17. The shunt field winding is made up of many more turns of a small gauge wire to increase its resistance when compared to the series-field winding. As a result, the current flow through the field winding is lower.

Since the power supply is connected directly to the field winding, the field current is constant and the torque developed by the motor depends on the armature current. Therefore, at start-up, the torque is low but reaches its maximum at full speed. These motors are used for applications such as conveyors where despite variations in torque, a relatively constant operating speed is required. The speed-torque characteristic curve for a shunt-wound motor is shown in Figure 2.19.

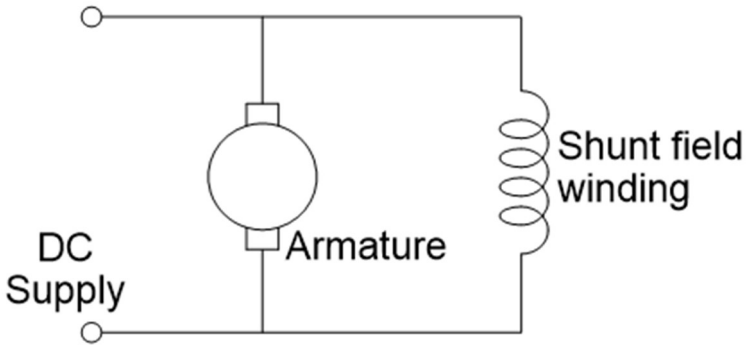

Figure 2.17 Arrangement of shunt-wound DC motors

The equivalent circuit for a shunt-wound DC motor is shown in Figure 2.18.

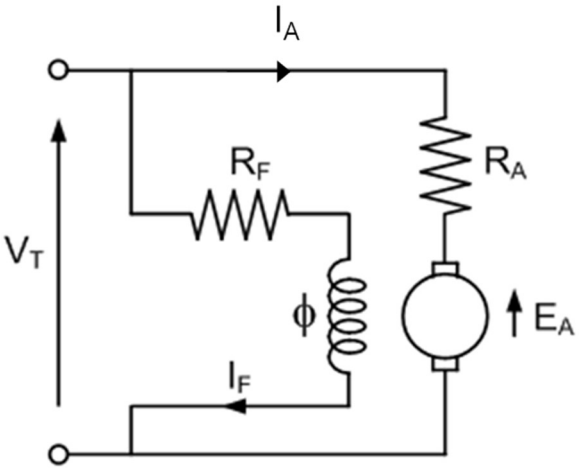

Figure 2.18 Equivalent circuit for a shunt-wound DC motors

As the field resistance is very much greater than the armature resistance ($R_F >> R_A$), the armature current is much more than the field current ($I_F << I_A$), and the flux, Φ remains almost constant.

Since torque, $T = K \times \Phi \times I_A$ (where K is a constant), and Φ is almost constant,
$T \alpha I_A$.

Useful Power = E_A x I_A = Torque x ω

Therefore, E_A x I_A = (K x Φ x I_A) x ω

E_A = (K x Φ) x ω

Since, $E_A = V_T - (I_A \times R_A)$

$\omega = [V_T - (I_A \times R_A)] / K \times \Phi$

The relationship between torque and speed with armature current for a shunt-wound DC motor is shown in Figure 2.19.

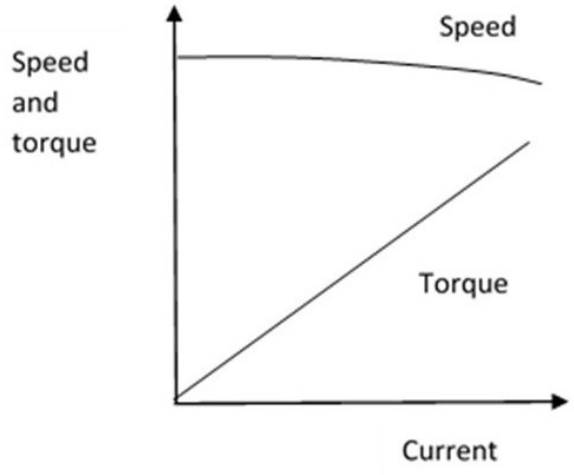

Figure 2.19 Speed-torque characteristic for shunt-wound DC motors

When the motor starts operating, it will pick up speed due to acceleration. The increase in speed causes the back emf to rise and the armature current to decrease. This results in a decrease in the torque generated by the motor (to match the load) and the motor reaching a steady state.

During operation, if the load increases, the speed and back emf will reduce. This causes the armature current to increase and results in the motor developing a higher torque (to match the load). The motor will then reach a steady state condition. Similarly, if the load reduces, the opposite will occur (speed and back emf will increase) resulting in the motor reaching a new steady state condition.

Example 2.5

A DC shunt-wound motor delivers power to a load at 1000 rpm. The supply voltage is 200 V and armature current drawn by the motor is 160 A. The armature circuit

resistance of the motor is 0.4 Ω and the field resistance is 100 Ω. If there are no mechanical losses, what is the value of the load torque?

Solution

The back-emf induced in the armature, $E_A = V_T – I_A \times R_A$

$= 200 - 160 \times 0.4 = 136$ V

Power developed, $P = E_A \times I_A$

$= 136 \times 160 = 21{,}760$ W

Load torque, $T = P/\omega$

Since speed $\omega = 2\pi N/60$

where N is the speed in revolutions per minute (rpm)

$T = 21{,}760 / [(2\pi/60) \times 1000]$

$= 207.9$ Nm

Compound-wound

Compound-wound DC motors have a combination of series and parallel wound field windings. One shunt field is connected in parallel with the armature, while the other is connected in series with the armature as shown in Figure 2.20. The shunt field provides the advantage of constant speed, while the series field provides the ability to develop a high starting torque. Such motors can handle sudden increase in load without great change in speed. The speed-torque characteristic curve for a compound-wound motor is shown in Figure 2.21.

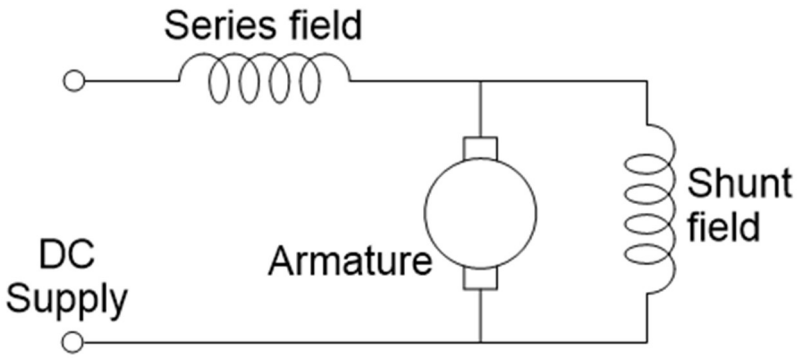

Figure 2.20 Arrangement of compound-wound DC motors

In a cumulatively compounded motor, there is a constant component of flux and a flux component proportional to the armature current. These motors have a higher starting torque than shunt-wound motors but lower than series-wound motors.

The series field is less significant at light loads and motor behaves as a shunt-wound motor. On the other hand, the series flux becomes quite large at high loads, the motor acts like a series-wound motor.

The same two techniques used for speed control of shunt-wound motors are also available for speed control of compounded motors. These are:

- Adjusting the field resistance
- Adjusting the armature voltage

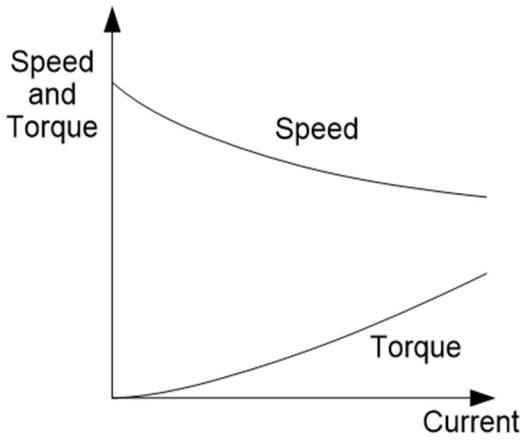

Figure 2.21 Speed-torque characteristic for compound-wound DC motors

Permanent magnet motors

Permanent magnet motors consist of a permanent magnet stator and a wound rotor as shown in Figure 2.22. The change in the polarity of the magnetic field in the rotor is achieved by switching current between the coils using a commutator and brushes. These motors have good starting torque and lower motor losses.

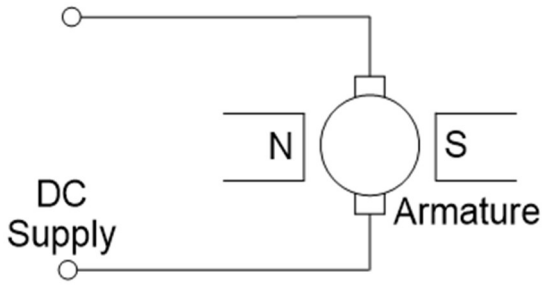

Figure 2.22 Arrangement of permanent magnet DC motors

Advantages of permanent magnet motors:

1. Since no external field circuit is required, there are no copper losses
2. Since no field windings are needed, these motors are generally smaller

Disadvantages of permanent magnet motors

1. Since permanent magnets produce weaker flux densities than externally supported shunt fields, such motors have lower induced torque
2. There is a risk of demagnetization from extensive heating

Since the flux of a permanent magnet motor is fixed, the only method of speed control is by armature voltage control.

2.3 Brushless electronically commutated (EC) motors

EC (Electronically Commutated) motors are permanent magnet non-commutated synchronous motors. They are also known as brushless DC motors.

Conventional DC motors rely on carbon brushes and commutation ring to switch the current direction in the rotating armature. The interaction between this internal rotor and fixed permanent magnets in the stator results in its rotation. In EC motors, the commutator and brushes are replaced by electronic circuitry, which switches the armature current in the manner required to create rotation of the armature.

DC motors are about 30% more efficient than AC motors because, the secondary magnetic field comes from permanent magnets rather than copper windings (in AC motors, additional energy is used to create a magnetic field in the rotor by inducing a current). However, for conventional DC motors, a separate DC power supply is required, which normally has to be generated using the AC power supply. This process results in additional energy losses and therefore, no significant advantage in energy savings.



Figure 2.23 Fan impeller mounted on an EC motor (image courtesy of ebm-papst)

EC motors have integrated electronics which can be connected directly to an AC supply. In addition to performing the commutation, the electronics convert AC to DC and control the motor speed by regulating the power to the motor. An image of a fan driven by an EC motor is shown in Figure 2.23.

2.4 Synchronous motors

Synchronous motors have stator windings where an AC voltage is applied to produce a rotating magnetic field. A DC voltage is supplied to the rotor via brushes to create a magnetic field, which interacts with the rotating magnetic field in the stator, resulting in the rotation of the rotor. The arrangement and winding configuration of a synchronous motor are shown in Figures 2.24 and 2.25. At steady state, the speed of the rotor is the same as the speed of the rotating magnetic field in the stator. As the rotor does not rely on magnetic induction from the stator as in the case of AC induction motors, slip is not required to produce torque. Therefore, motor speed is independent of load. Synchronous motors are used when a precise constant speed is required.

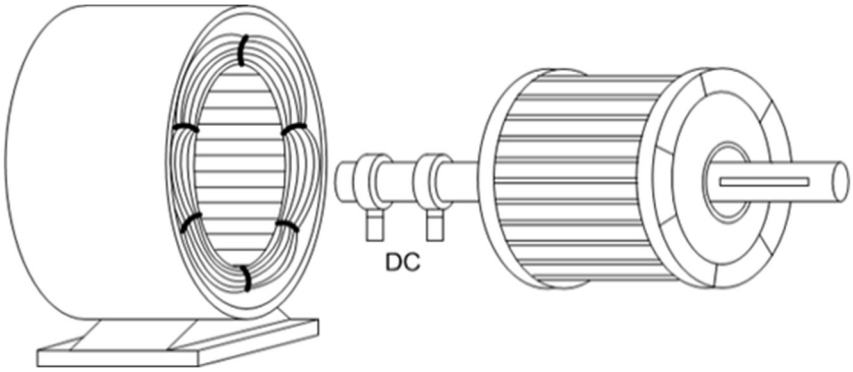

Figure 2.24 Arrangement of a synchronous motor

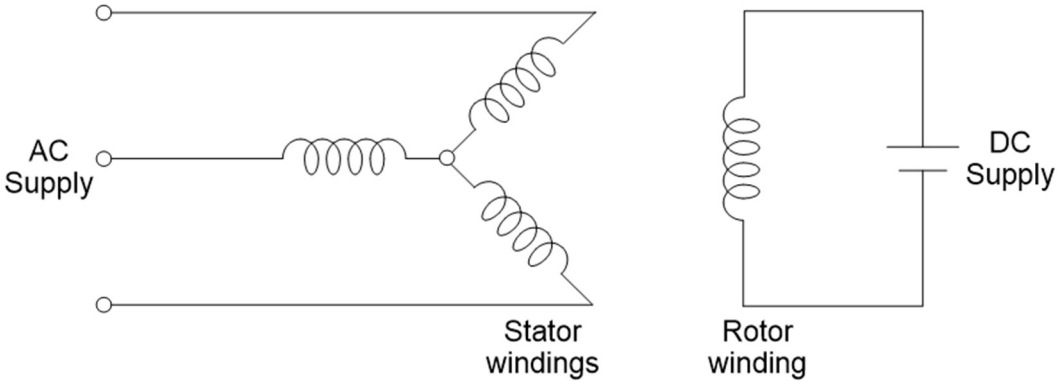

Figure 2.25 Arrangement of windings in a synchronous motor

As synchronous motors are not self-starting, the rotor consists of a squirrel cage winding for starting as in induction motors and wound field poles for operation at a synchronous speed. Since the rotor winding is excited by a DC supply, the field excitation can be increased to provide a leading power factor.

2.5 Universal motors

A universal motor is a type of electric motor that can operate on AC or DC power. It is a commutated series-wound motor where the stator field coils are connected in series with the rotor windings through a commutator as shown in Figure 2.26.

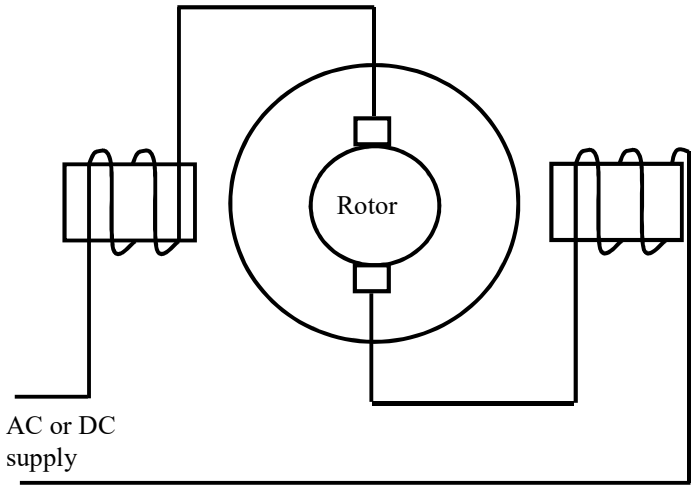

Figure 2.26 Arrangement of a universal motor

The universal motor is similar to a DC series connected motor but is modified to allow the motor to operate on AC power. When using DC supply, it works on the principles of a DC motor. When using AC supply, the current in both the field coils and the

armature (and the resultant magnetic fields), alternate polarity synchronously with the supply. Hence, the resulting mechanical force occurs in a consistent direction of rotation.

Universal motors are commonly used in portable power tools and equipment, as well as many household appliances. They have a high starting torque, can operate at high speed, and are lightweight and compact. However, the commutator brushes wear during operation, so they are not used for equipment that is in continuous use. The efficiency of universal motors is less when operating on AC supply (compared to when operating on DC supply).

The speed vs load characteristics of a universal motor is similar to that of a DC series motor. The speed of a universal motor is low at full load and very high at no load, as shown in Figure 2.27.

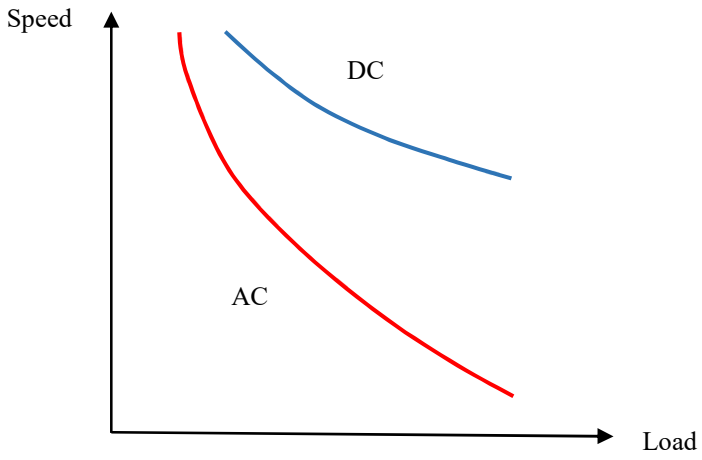

Figure 2.27 Speed vs load characteristics for universal motors

2.6 Motor selection

When selecting a motor for a particular application, criteria such as the motor characteristics, power supply, installation requirements and environmental conditions need to be considered.

Some common criteria to be considered when selecting a motor are listed below.

Rated Power

The rated power of a motor refers to the output power. When selecting a motor for a particular application, the output power required should be computed based on the torque and speed of the load and drive losses between the motor and the load.

Rated Speed

The operating speed of a motor depends on the number of poles. The highest speed is achieved with 2-pole motors. Therefore, for high speed applications, 2-pole motors should be selected. For lower speeds, motors with 4 or more poles can be used with suitable transmission drives to achieve the required speed.

Power supply voltage and frequency

The power supply to the motor can be single phase or 3-phase. The normal power supply voltage in Singapore is 230 V for single phase and 400 V for 3-phase. The power supply frequency is 50 Hz.

Motor characteristics

The most important motor characteristics that need to be considered are torque, starting current and slip. Depending on the type of load, a motor with the appropriate characteristics has to be selected.

Most loads can be classified into one of the three main types, which are:

- Constant torque
  - Conveyors
  - Cranes & hoists
  - Extruders
- Variable torque
  - Centrifugal pumps
  - Centrifugal fans
- Cyclical loads
  - Presses
  - Reciprocating compressors

The following selection criteria are applied when sizing motors:

- operating torque for constant torque loads
- 100% load for variable torque loads

- motor breakdown torque for cyclical loads

Service factor

Service factor (SF) is a measure of load above the rated capacity at which a motor can operate, without overload or damage for a short period of time. SF is 1 for standard motors. If SF is 1.1 for a particular motor, then that motor would be able to operate at 110% of its rated capacity, occasionally when needed. If a motor with SF=1 continuously operates above 100% load, its life expectancy will be reduced.

Motor Duty Cycle

The duty cycle of a motor is the amount of time the motor can be operated out of every hour. If the motor duty cycle is listed as continuous, it means the motor can be operated 24 hours a day and does not need to be turned off to cool down. If the duty cycle is rated for 40 minutes, it means the motor can be safely operated for 40 minutes before it must be shut down to allow it to cool.

Various duty cycle designations can be used to describe electrical motor operating conditions. A typical set of duty cycles defined by IEC 60034-1 (2017) are listed in Table 2.2.

S1	Continuous running duty	The motor works at a constant load maintained for sufficient time to allow the machine to reach thermal equilibrium.
S2	Short-time duty	The motor works at a constant load for a given time, less than that required to reach thermal equilibrium, followed by a time de-energised and at rest of sufficient duration to re-establish machine temperature within 2K of the coolant temperature.
S3	Intermittent periodic duty	A sequence of identical duty cycles, each including a time of operation at constant load and a time de-energised and at rest. In this duty, the cycle is such that the starting current does not significantly affect the temperature rise.
S4	Intermittent periodic duty with starting	A sequence of identical duty cycles, each cycle including a significant starting time, a time of operation at constant load and a time de-energised and at rest.

S5	Intermittent periodic duty with electric braking	A sequence of identical duty cycles, each cycle consisting of a starting time, a time of operation at constant load, a time of electric braking and a time de-energised and at rest.
S6	Continuous operation periodic duty	A sequence of identical duty cycles, each cycle consisting of a time of operation at constant load and a time of operation at no-load. There is no time de-energised and at rest.
S7	Continuous operation periodic duty with electric braking	A sequence of identical duty cycles, each cycle consisting of a starting time, a time of operation at constant load and a time of electric braking. There is no time de-energised and at rest.
S8	Continuous operation periodic duty with related load/speed changes	A sequence of identical duty cycles, each cycle consisting of a time of operation at constant load corresponding to a predetermined speed of rotation, followed by one or more times of operation at other constant loads corresponding to different speeds of rotation. (carried out for example, by means of a change in the number of poles in the case of induction motors). There is no time de-energised and at rest.
S9	Duty with non-periodic load and speed variations	A duty in which generally load and speed vary non-periodically within the permissible operating range. This duty includes frequently applied overloads that may greatly exceed the reference load.
S10	Duty with discrete constant loads and speeds	A duty consisting of a specific number of discrete values of load (or equivalent loading) and if applicable, speed, each load/speed combination being maintained for sufficient time to allow the machine to reach thermal equilibrium. The minimum load within a duty cycle may have the value of zero (no-load or de-energised and at rest)

Table 2.2 Typical designation of motor duty cycles (courtesy of IEC)

Motor mounting configuration

Motors are normally designed for foot mounting or flange mounting to suit various applications.

Method of speed control

Motors can be designed to operate at a constant speed, multiple speeds with multiple sets of windings and variable speed. The most common method of speed variation is using an inverter to adjust the power supply frequency to the motor (discussed later under variable frequency drives).

Motor insulation and environmental temperature

Motors are designed with different insulation classes so they can be operated under different environmental temperatures. Insulation classes are defined by organisations such as IEC and NEMA. The maximum motor operating temperatures for commonly used insulation classes are summarised in Table 2.3.

NEMA Insulation class	IEC 60085	Maximum operating temperature allowed (°C)	Allowable temperature rise at full load for service factor 1.0 motors (°C)	Hot spot allowance (°C)
A	105	105	60	5
B	130	130	80	10
F	155	155	105	10
H	180	180	125	15
R	220	220	150	30

Table 2.3 Typical motor insulation classes (courtesy of IEC and NEMA)

The maximum operating temperature is determined by adding the rated ambient temperature (normally 40°C), the maximum allowable temperature rise and the hot spot allowance (hot spot is a point at the centre of the motor's windings where temperature is higher).

Maximum operating temperature (°C) = rated ambient temperature + allowable temperature rise + hot spot allowance

Motor enclosure

The common types of motor enclosure are listed below:

TEFC (totally enclosed fan cooled) – designed to prevent exchange of air between the inside and outside of the frame. A fan is attached to the shaft and blows air over the frame during operation to remove heat.

ODP (open drip proof) - allows air to circulate through the windings for cooling, but prevent drops of liquid from falling into motor within a 15-degree angle from vertical. Typically used for indoor applications in relatively clean, dry locations.

TENV (totally enclosed non-ventilated) - similar to TEFC motors, but has no cooling fan and relies on natural convection for cooling. Suitable for use where motors are exposed to dirt or dampness.
TEAO (totally enclosed air over) – dust tight motors designed to be used with shaft mounted fans or belt driven fans and where the motor must be mounted within the airflow of the fan.

TEWD (totally enclosed wash down) - designed to withstand high pressure washing or other high humidity or wet environments. Designed for use in extremely moist or chemical environments, but not for hazardous locations.

EXPL (explosion proof) - totally enclosed and is designed to withstand an explosion of specified gas or vapor inside the motor casing and prevent the ignition outside the motor by sparks, flashing or explosion.

HAZ (hazardous location) – motors designed to operate in specific hazardous locations.

Motor enclosures are also classified according to IP rating codes (IP XX) which are classifications used to measure levels of protection, such as preventing the intrusion of solid objects and liquids into an enclosure or motor. Solid objects include body parts such as hands and fingers, as well as dust and debris.

2.7 Motor requirements for special applications

Some specific applications require motors with special designs. A few such applications and the requirements are listed below.

<u>Cranes and hoists</u>

- high starting torque
- high torque at low speeds and low torque at high speeds
- acceleration and retardation have to be uniform
- steady braking of the motor against overhauling must be possible
- mechanical braking must be available for emergency conditions
- may require to work in dusty environments

- may need to withstand high ambient temperature

Mill drives

- high starting torque
- capable of reverse rotation
- capable of four quadrant operation
- operate at wide range of speeds
- duty cycle with frequent starts and stops
- may require to work in dusty environments
- may need to withstand high ambient temperature

Machine tools

- capable of speed control
- capable of high speed operation
- duty cycle with frequent starts and stops
- able to reverse direction
- low inertia for fast response
- able to provide precise positioning

Summary

This chapter provided an introduction to the commonly used types of electric motors such as AC induction motors, DC motors and synchronous motors. The key characteristics and design features of each type of motor were presented, followed by selection criteria to be considered when selecting a motor for a particular application.

References

1. ebm-papst website, EC fans and motors.
2. Improving motor and drive system performance: A source book for industry, US DOE, 2008.
3. International Electrotechnical Commission Standard 60085 Electrical Insulation-Thermal Evaluation and Designation, 3rd edition, 2007.
4. International Electrotechnical Commission Standard 60034-1 Rotating electrical machines – Part 1: Rating and performance, 2017.

5. International standard EN 60529 “degrees of Protection Provided by Enclosures (IP Codes),” Ed. 2.1 (Geneva: International Electrotechnical Commission, 2011).
6. International standard IEC 34-7, Rotating electrical machines: Classification of types of construction and mounting arrangements, 1992.
7. Jayamaha, Lal, Energy-Efficient Industrial Systems, Evaluation and Implementation, McGraw-Hill, 2016.
8. NEMA (National Electrical Manufacturers Association), Standards Publication MG1-2016.
9. Petruzella, Frank D, Electrical Motors and Control Systems, McGraw-Hill, 2010.
10. Subrahmanyam, V, Electric Drives, Concepts and Applications, McGraw-Hill, New Delhi, 2013.
11. Technology – Basic principles publication, ebm-papst Mulfingen Gmbh & Co. KG, 2017.

3.0 MOTOR EFFICIENCY

The efficiency of a motor is a measure of how well it can convert the input power into useful work. Some devices like electric heaters can convert 100% of the power consumed into heat. However, in other devices such as motors, the total energy consumed cannot be fully converted into usable energy as a certain portion is lost and is not recoverable because it is expended as losses associated with operating the device. Therefore, it is necessary to provide more than 1 kW of electrical power to produce 1 kW of mechanical output.

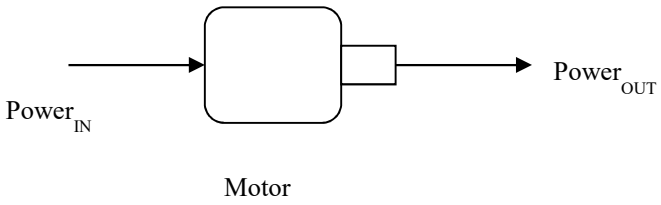

Figure 3.1 Definition of motor efficiency

$$\text{Motor efficiency } , \eta = \frac{\text{Power}_{\text{OUT}}}{\text{Power}_{\text{IN}}} \quad (3.1)$$

This chapter describes the concept of motor efficiency and the typical energy losses in motors. In addition, the economics of replacing standard efficiency motors with high efficiency motors is illustrated using examples.

Learning Outcomes:

The main learning outcomes from this chapter are to understand:

1. Definition of motor efficiency
2. Common types of energy losses in motors
3. Efficiency standards for motors
4. Economics of motor replacement

3.1 Energy losses in motors

In motors, most of the energy that is lost is emitted in the form of heat. As shown in Figure 3.2, motor losses can be categorised as copper losses, iron (core) losses, friction and windage losses and stray losses.

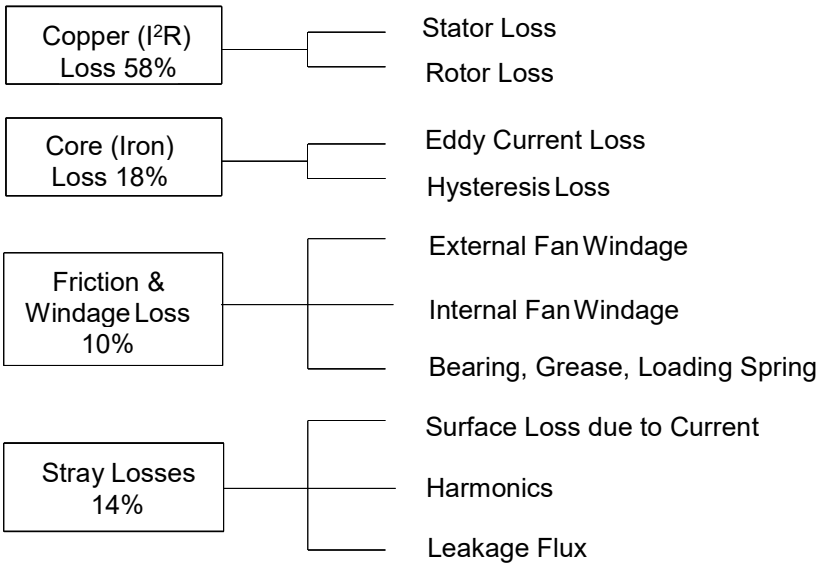

Figure 3.2 Losses in a typical motor

The largest single loss in a motor is the resistance loss (I^2R) which accounts for more than half of the losses. Resistance loss occurs when current passes through the stator windings, rotor conductors and end rings, and is dissipated as heat.

The core losses are due to eddy currents and hysteresis. The magnetic field of the stator while inducing a voltage in the rotor winding also induces a voltage in the iron core, resulting in current flows in the iron core (Figure 3.3). These current flows are called eddy currents and are dissipated as heat leading to losses. To minimise eddy current losses, the core is made up of layers called laminations (sheets of steel) with insulation in between to confine eddy currents within each lamination (Figure 3.4).

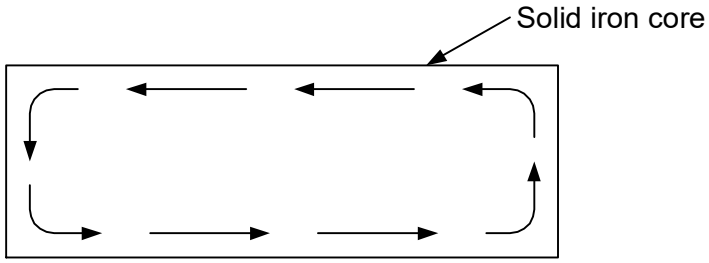

Figure 3.3 Eddy current in solid iron core

Hysteresis loss is due to residual magnetism in electromagnets. When a magnetic field is applied and later removed, the magnetic flux density does not reach zero and a further magnetic field needs to be applied in the opposite direction to bring the residual magnetism to zero. The path followed during the magnetisation cycle is called the hysteresis loop. Materials that have high magnetic retention are called “hard”

magnetic materials while those which have lower magnetic retention are termed “soft” magnetic materials. Typical hysteresis loops for “hard” and “soft” magnetic materials are shown in Figure 3.5. When a magnetic material is subjected to continuously cycling through this loop, energy is dissipated as heat. The thinner the hysteresis loop, the lower the losses. For example, using silicon steel which is a “soft” magnetic material can reduce core losses by 10% to 25%.

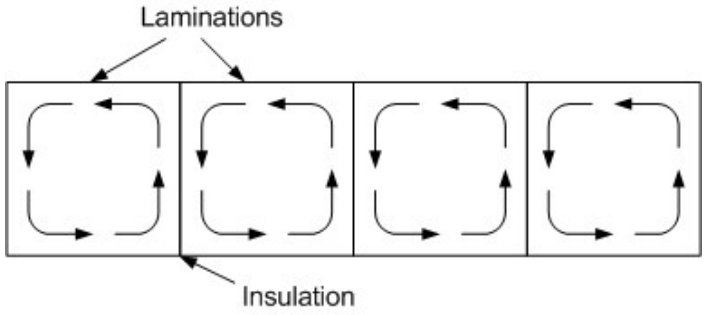

Figure 3.4 Eddy currents in laminated iron core

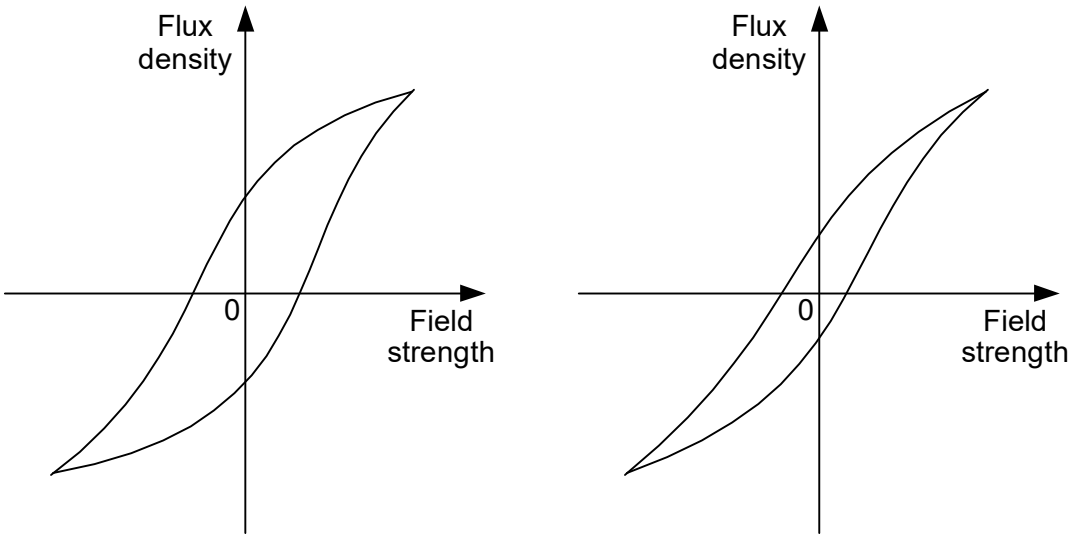

Figure 3.5 Hysteresis loops for “hard” and “soft” magnetic materials

Friction and windage losses are caused by bearing friction and air resistance (drag) of the motor cooling fans respectively.

Other types of losses are stray losses which are mainly due to harmonic energy generated when the motor operates under load.

Losses in motors can also be categorised as load and no-load losses. Load losses are resistance losses and stray losses that vary with load. No-load losses are core losses and friction and windage losses that remain constant regardless of the load.

3.2 High efficiency motors

The efficiency of motors depends on size and normally ranges from about 78% to 93% for standard efficiency motors. In addition to these standard motors, various premium efficiency motors which operate at efficiency about 3% to 7% higher than the standard designs are also available.

High efficiency motors are designed to minimise losses by using various techniques and these are summarised in Table 3.1.

Type of loss	Remediation
Stator resistance losses	Using wire with lower resistance and improving stator slot design
Rotor resistance losses	Increasing size of aluminum conductor bars and end rings to reduce resistance and use of copper conductors in larger motors
Hysteresis losses	Using steel containing up to 4% silicon instead of normal carbon steel for the laminations and lengthening the core to reduce magnetic flux density.
Eddy current losses	Using thinner laminations and increasing insulation between laminations
Friction losses	Bearings and seal selection to lower friction
Windage losses	Fan selection and sizing to minimise drag
Stray losses	Improving rotor slot geometry

Table 3.1 Techniques used to reduce motor losses

Minimum motor efficiency requirements are stipulated by various organisations and Standards.

In USA, the National Electrical Manufacturers Association (NEMA) has set minimum ratings for standard and premium efficiency motors. The NEMA premium efficiency motors are much more efficient than standard efficiency motors. They are also more

efficient than the Energy Policy Act of 1992 (EPACT) compliant motors which are required to comply with American Society of Heating, Refrigerating and Air-Conditioning Engineers (ASHRAE)) Standard 90.1, “Energy standard for buildings except low-rise residential buildings”.

Similarly, the European Committee of Manufacturers of Electrical Machines and Power Electronics (CEMEP) and the European Union (EU) have a motor efficiency classification EFF1, EFF2 and EFF3 (EFF1 being the highest efficiency). These classifications have been replaced with IEC 60034-30-1 (explained below).

The International Electrotechnical Commission (IEC) has also introduced a new standard (IEC 60034-30-1:2014) relating to energy efficient motors. This standard defines new efficiency classes for motors and harmonises the currently different requirements for induction motor efficiency levels around the world.

IEC 60034-30 defines four IE (International Efficiency) classes IE1 (standard efficiency), IE2 (high efficiency), IE3 (premium efficiency), and IE4 (super premium efficiency). The minimum IE1 to IE4 efficiency values for 4-pole motors operating on 50 Hz supply are shown in Figure 3.6.

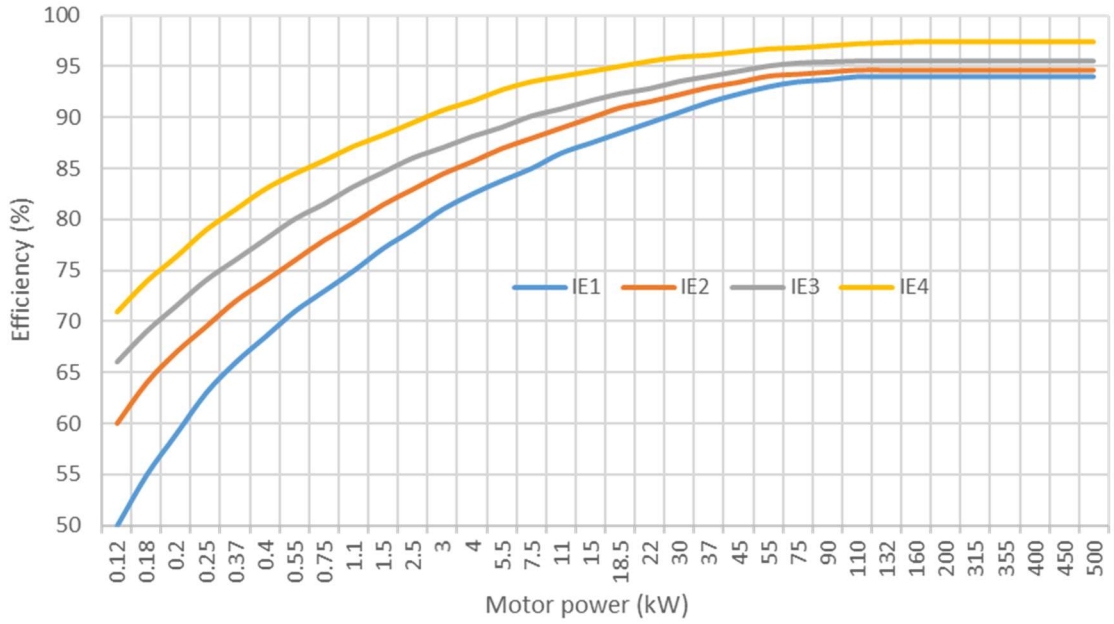

Figure 3.6 Efficiency for 4-pole motor with 50 Hz power supply (courtesy of IEC)

Table 3.2 shows a comparison of the IE classes with the NEMA (US) and the European motor rating standards.

Motor type	IEC 60034-30	US / NEMA equivalent	European equivalent
Standard	IE1	Standard	EFF2
High efficiency	IE2	EPACT	EFF1
Premium efficiency	IE3	NEMA Premium	
Super-premium efficiency	IE4		

Table 3.2 Comparison between standards

The minimum specified efficiencies for IE2 and IE3 motors operating at 50 Hz for selected range of motor sizes are listed in Table 3.3.

Motor power (kW)	2 pole		4 pole		6 pole	
	IE2	IE3	IE2	IE3	IE2	IE3
0.75	77.4	80.7	79.6	82.5	75.9	78.9
5.5	87.0	89.2	87.7	89.6	86.0	88.0
11	89.4	91.2	89.8	91.4	88.7	90.3
22	91.3	92.7	91.6	93.0	90.9	92.2
37	92.5	93.7	92.7	93.9	92.2	93.3
45	92.9	94.0	93.1	94.2	92.7	93.7
55	93.2	94.3	93.5	94.6	93.1	94.1
75	93.8	94.7	94.0	95.0	93.7	94.6
110	94.3	95.2	94.5	95.4	94.3	95.1

Table 3.3 Comparison between IE2 and IE3 motors

(the author thanks the International Electrotechnical Commission (IEC) for permission to reproduce Information from its International Standards. All such extracts are copyright of IEC, Geneva, Switzerland. All rights reserved. IEC 60034-30-1 ed.1.0. Copyright © 2014 IEC Geneva, Switzerland. www.iec.ch)

In general, IE2 motors are about 1% to 3% more efficient than IE1 motors, while, IE3 motors are about 3% to 5% more efficient than IE1 motors.

From October 2018, Singapore will be implementing a new minimum energy performance standard (MEPS) for motors. All motors (except for some exclusions), will have to meet IE3 or higher efficiency standards.

Motors that will be covered under the MEPS scope are:

- Single speed three phase induction motors
- Operating on 50 Hz power supply
- 2, 4 and 6 pole
- Rated output power from 0.75 to 375 kW
- Rated voltage up to 1000 V
- Rated on the basis of continuous duty operation

3.3 Impact of motor loading on efficiency

The operating efficiency of motors also depends on the loading. As Figure 3.7 shows, motor efficiency is close to its full load efficiency when loaded above 40%, but drops significantly if the motor is loaded lower than this value. Therefore, if a motor is loaded to less than about 40%, it should be considered for replacement with a correctly sized motor. However, care should be taken to ensure that the replacement motor can meet the starting torque required for a particular application as in some instances motors are “oversized” to overcome a high starting torque.

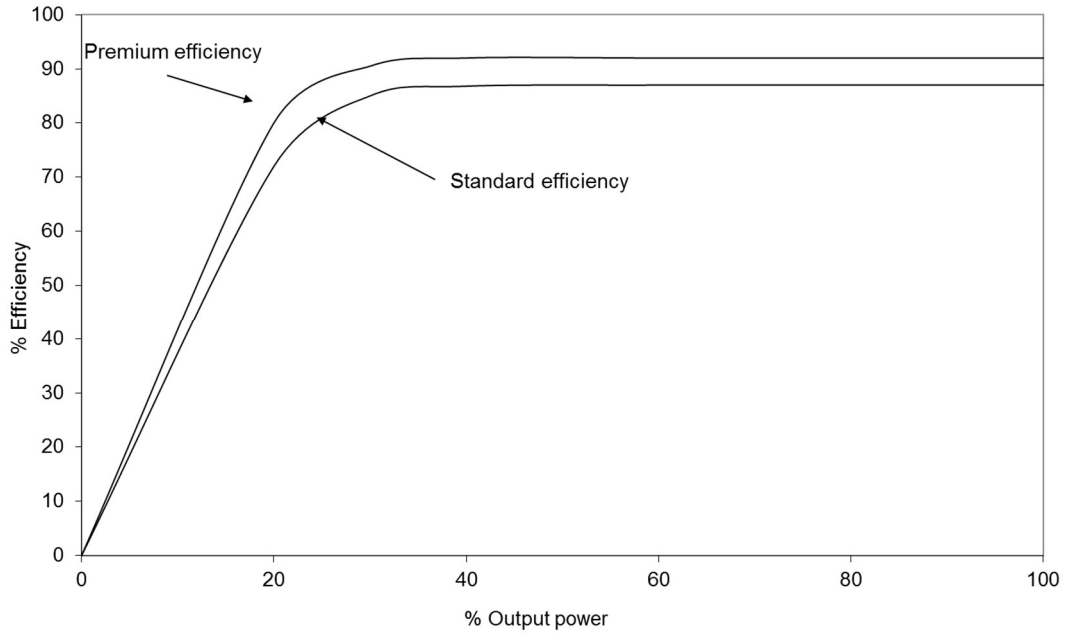

Figure 3.7 Motor efficiency vs. loading

3.4 Estimating motor loading

Since motor operating efficiency is dependent on loading, it is necessary to know the loading of motors to ensure efficient operation. Motor capacity is rated based on the output power and therefore motor loading is the ratio of the actual motor power output at the operating load to the rated capacity of the motor. Although it is possible to measure the output of motors under laboratory test conditions, it is not practical to do so under actual operating conditions. Therefore, the loading of motors generally needs to be estimated. Two common methods used for estimating the loading of motors are the “input method” and the “slip method”.

Input method

The input method involves measuring the input power to the motor and multiplying it by the rated motor efficiency to estimate the motor output power and loading as follows:

Motor output power = motor input power x motor rated efficiency

Motor loading (%) = (motor input power x motor rated efficiency x 100) / (motor rated power)

Since in this method, the efficiency of the motor at the operating load is assumed to be the full-load efficiency, it may not provide a good estimation when the motor is loaded below about 40% (when the efficiency drops significantly).

Example 3.1

The input power to a 55 kW motor is measured to be 42 kW. If the design motor efficiency is 89%, estimate the motor loading.

Solution

Motor loading = (motor input power x motor rated efficiency x 100) / (motor rated power)

= (42 x 0.89 x 100) / (55)
= 68%

Slip method

Since the amount of slip in a motor is proportional to the load, the operating speed of a motor increases at lower load (lower slip). Therefore, the operating speed of a motor can be used to estimate its loading as follows:

Motor loading (%) = $[(S_s – S) \times 100] / [S_s – S_r]$

where, S_s = synchronous speed
S = actual motor operating speed
S_r = rated motor speed

Example 3.2

The motor operating speed and rated full load speed of a 2-pole motor are 2920 and 2870 rpm respectively. Estimate the motor loading using the slip method.

Solution

Synchronous speed = (120 x 50) / 2
= 3000 rpm

Motor loading = [(3000 – 2920) x 100] / [3000 – 2870]
= 61.5%

3.5 Economics of energy efficient motors

Premium efficiency motors consume less energy than standard efficiency and high efficiency motors due to the lower input power required to produce the same output, resulting in lower energy cost. However, the economic viability of using premium efficiency motors instead of standard efficiency or high efficiency motors depends on the cost associated with the actual application. In general, there are the following three main types of applications:

- Replacement of an existing standard efficiency motor with a premium efficiency motor
- Replacement of a defective motor with a new premium efficiency motor
- Use of a premium efficiency motor for a new installation

The economics for the above three applications can be quite different. For the first application where an existing motor is to be replaced, the full cost of the new premium efficiency motor has to be considered. In comparison, for the third application of a new installation, only the incremental cost for the premium efficiency motor (compared to the cost of a standard efficiency motor) needs to be considered. Similarly, for the application where a defective motor is to be replaced, the incremental cost and possible drop in efficiency due to the repair need to be taken into account.

Some of the reasons for a possible drop in motor efficiency after repair are damage to laminations while stripping the motor and damage to the iron core due to high temperatures experienced during failure. Possible efficiency losses due to the poor quality of rewinding are indicated in Table 3.4.

Motor power (kW)	Possible reduction in motor efficiency (%)
7.5	6.0
37.3	3.7
75	2.1
150	1.9

Table 3.4 Efficiency drop due to poor rewinding (Ref. [1])

Some of the factors that affect the economic viability of the different applications are summarised with brief explanations in Table 3.5.

Factor	Impact on economic viability
Efficiency of the existing motor	The lower the efficiency of the existing motor, the higher the energy saving.
Motor operating hours	The longer the operating hours, the higher the energy savings.
Motor loading	If the loading of the existing motor is low, it would result in poor motor operating efficiency. A correctly sized new motor would result in much better efficiency and higher savings.
Electricity tariff	The higher the tariff, the higher the savings.
Age of the existing motors	The older the existing motor, the justification to replace will be stronger due to the fact that the remaining motor life would be short and there would be a drop in efficiency due to aging.
Cost of the new high efficiency motor	The lower the cost of the new premium efficiency motor, the higher the return on investment.
Financial incentives	If financial incentives from authorities or utility companies are available to offset part of the cost of the new motor, the resulting return on investment will be better.
Drop in efficiency due to repairs	When a motor is defective and needs to be repaired, the possible drop in efficiency due to the repair and the cost of the repair need to be considered. The higher the repair cost and the higher the drop in efficiency, the stronger the justification for using a higher efficiency motor.

Table 3.5 Factors affecting economic viability of using high efficiency motors

The following examples illustrate the economics associated with each type of application.

Example 3.3

A 22 kW motor of 88% efficiency is used for an application which requires it to operate 12 hours a day and 365 days a year. Calculate the savings that will result if this motor is replaced with a premium efficiency motor of 93% efficiency. Assume that the motor is operating at its rated capacity.

Estimate the simple payback period if the cost of the new motor is $3,000 and the average electricity tariff is $0.15 / kWh.

Solution

$$\text{Motor efficiency, } \eta = \frac{\text{Power}_{OUT}}{\text{Power}_{IN}}$$

Therefore, $\text{Power}_{IN} = \dfrac{\text{Power}_{OUT}}{\text{Motor efficiency}}$

Estimated power input to existing motor, P_1 = 22 / 0.88 = 25 kW

Estimated power input to proposed motor, P_2 = 22 / 0.93 = 23.7 kW

Saving in power ($P_1 - P_2$) = (25 – 23.7) kW
= 1.3 kW

Energy savings = power savings (kW) x operating hours (hours)

Annual energy savings = 1.3 x 12 x 365 kWh / year
= 5,694 kWh / year

Annual cost savings = Annual energy savings in kWh x energy tariff
= 5,694 x 0.15
= $854.10 / year

Simple payback period = cost of new motor / annual cost savings
= $3,000 / $854.10
= 3.5 years

Example 3.4

The stator winding of a 55 kW motor which operates 18 hours a day and 250 days a year is defective. The cost of repairing the defective motor is $4,000. However, the efficiency of the motor is expected to drop by 1% from its rated efficiency of 89% after the repair. Calculate the energy and cost savings that will result if this motor is replaced with a premium efficiency motor of 93% efficiency rather than repairing it. Assume that the motor is operating at its rated capacity.

Estimate the simple payback period for replacing the defective motor with the premium efficiency motor (93% efficiency) if the cost of the premium efficiency motor is $10,000 and the average electricity tariff is $0.15 / kWh.

Solution

$$\text{Power}_{IN} = \frac{\text{Power}_{OUT}}{\text{Motor efficiency}}$$

Estimated power input to motor after repair, $P_1 = 55 / (0.89 – 0.01) = 62.5$ kW

Estimated power input to premium efficiency motor, $P_2 = 55 / 0.93 = 59.1$ kW

Saving in power ($P_1 – P_2$) = (62.5 – 59.1) kW
= 3.4 kW

Energy savings = power savings (kW) x operating hours (hours)

Annual energy savings = 3.4 x 18 x 250 kWh / year
= 15,300 kWh / year

Annual cost savings = Annual energy savings in kWh x energy tariff
= 15,300 x 0.15
= $2,295 / year

Simple payback period = Incremental cost of new motor / annual cost savings
= ($10,000 – $4,000) / $2,295
= 2.6 years

Example 3.5

A 37 kW motor with a rated efficiency of 90% is selected for a new fan installation which is expected to run 24 hours a day and 365 days a year. Calculate the savings in input power to the motor that can be achieved for this application if a premium efficiency motor with 94% efficiency is used. Assume that the motor is operating at the rated capacity.

If the cost of the originally selected motor and the premium efficiency motor are $7,000 and $8,500 respectively, calculate the simple payback period for using the premium efficiency motor rather than the originally selected motor for this application. Take the electricity tariff to be $0.15 / kWh.

Solution

$$\text{Power}_{IN} = \frac{\text{Power}_{OUT}}{\text{Motor efficiency}}$$

Estimated power input to standard efficiency motor, $P_1 = 37 / 0.90 = 41.1$ kW

Estimated power input to premium efficiency motor, $P_2 = 37 / 0.94 = 39.4$ kW

Saving in power ($P_1 – P_2$) = (41.1 – 39.4) kW
= 1.7 kW

Energy savings = power savings (kW) x operating hours (hours)

Annual energy savings = 1.7 x 24 x 365 kWh / year
= 14,892 kWh / year

Annual cost savings = Annual energy savings in kWh x energy tariff
= 14,892 x 0.15
= $2,233.80 / year

Simple payback period = Incremental cost of new motor / annual cost savings

= ($8,500 – $7,000) / $2,233.80
= 0.7 years

Summary

Definition of motor efficiency and the common types of energy losses in motors were described in this chapter. Thereafter, a few examples were used to illustrate the economics of motor replacement.

References

1. Custodio, Jim, The Impact of Rewinding on Motor Efficiency, GE Motors.
2. IEC 60034-30-1:2014, Standard on efficiency classes for low voltage AC motors, International Electrotechnical Commission, London 2008.
3. Jayamaha, Lal, Energy-Efficient Industrial Systems, Evaluation and Implementation, McGraw-Hill, New York, 2016.
4. Minimum energy performance standards (MEPS) for motors, National Environment Agency, Singapore, Industry Briefing, 2017.
5. SS 530:2014, Code of practice for energy efficiency standard for building services and equipment, Spring Singapore, 2014.

4.0 FAN SYSTEMS

Various types of fans are used for different applications in industrial plants and buildings. Fans are commonly used in buildings for cooling, heating and for providing ventilation for occupied spaces. In industrial plants, fans are used for providing ventilation, removal of contaminants and specific industrial processes such as drying.

This chapter provides an overview of the different types of fans and explains how to select a fan for a particular application. Various energy saving measures that can be incorporated to optimise the design of fan systems are also described in detail.

Learning Outcomes:

The main learning outcomes from this chapter are to understand:

1. Types of fans and important fan characteristics
2. Fan selection
3. Optimising design of fan systems
4. Optimising operation of fan systems

A typical application of fans in buildings for air distribution is shown in Figure 4.1. The fan takes outdoor air and a portion of the return air from the air-conditioned spaces and the air passes through a filter and cooling coil. Thereafter, the fan transports the air through the supply ducting system and supplies air to the spaces to be conditioned via outlets and dampers. Air is later returned from the conditioned spaces through the inlets and return ducting.

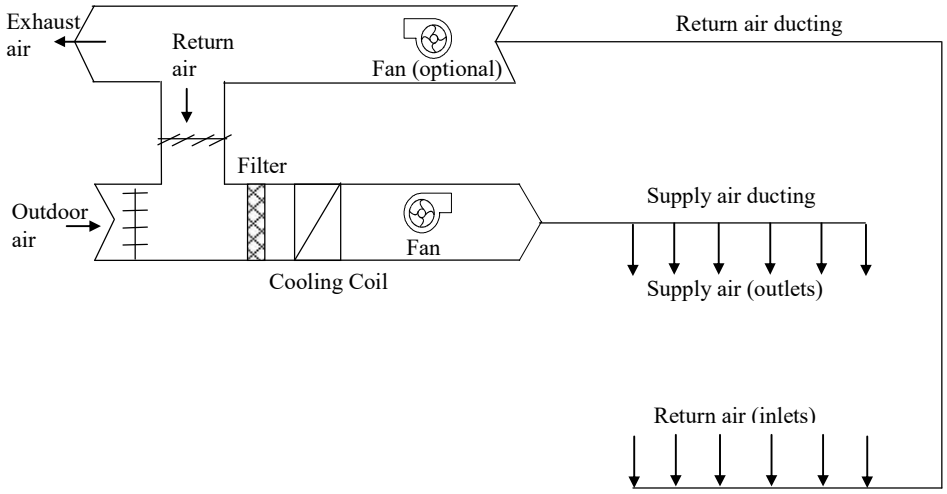

Figure 4.1 A typical fan system used in buildings

In such systems, the fan provides the necessary energy to move the air by overcoming frictional losses in the ducting and pressure losses due to components in the system such as filters, coils and various fittings. The electrical energy required to operate the system can be minimised if the system design is optimised to reduce these losses.

4.1 Types of fans

Once an air distribution system is designed, a suitable fan has to be selected to enable transmission of the required quantity of air through the system. The two main types of fans used for transporting air are centrifugal fans and axial-flow fans. Classification of common types of fans is shown in Figure 4.2.

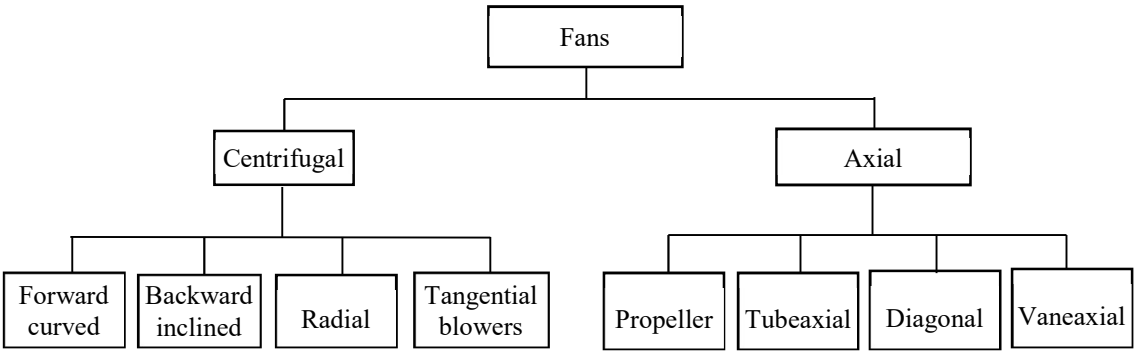

Figure 4.2 Classification of common types of fans

In centrifugal fans, the rotation of the impeller imparts kinetic energy to the air stream by increasing its velocity. This kinetic energy is later converted to static pressure when the velocity of air is reduced in the diffuser section of the fan prior to discharge. Centrifugal fans can generate high pressures. They can also be used for applications with high particulate content and those operating at high temperatures. Centrifugal fans can be further categorised into a number of types such as backward inclined, forward curved, radial blade and tubular centrifugal.

Another type of centrifugal fan is the tangential blower. These fans have a drum-shaped impeller and the blades are arranged in parallel to the axis of rotation. Air flows through the drum twice in centrifugal direction, once from the outside to the inside at the intake and later from the inside to the outside at the discharge area.

In axial flow fans, the air is pressurised by the aerodynamic lift generated by the fan blades. Axial flow fans are normally used for high flow, low pressure and relatively

clean air applications. These fans can be further classified as propeller fans, tubeaxial fans, diagonal fans and vaneaxial fans.

Propeller fans are the basic type of axial fan. They have a propeller-like rotor and are normally not connected to ductwork. They are less efficient than other types of axial fan.

Vaneaxial fans differ from tubeaxial fans as they have stationary guide vanes to “straighten” the air outlet by counteracting the rotational angle from the turning impeller blades. These vanes allow a higher pressure capability and improve efficiency.

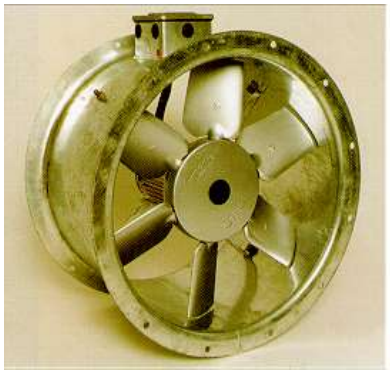

Tubeaxial fan (courtesy of Flakt Woods)



Diagonal fan (courtesy of ebm-papst)



Forward curved impeller
(courtesy of ebm-papst)



Backward curved impeller
(courtesy of ebm-papst)



Tangential blower
(courtesy of ebm-papst)

Figure 4.3 Commonly used fan impellers

A diagonal fan is a variation of the axial fan in which the housing and fan blades are of conical shape and the diameter becomes larger at the discharge. This arrangement causes the air to discharge diagonally. Compared to axial fans, diagonal fans are able to develop a higher pressure, but at a lower flow rate.

In building and industrial applications, forward curved and backward curved centrifugal fans and tubeaxial fans are the most commonly used types.

Tubeaxial fans

A tubeaxial fan essentially consists of a propeller fan installed in a cylinder. The fan can be directly mounted on the motor which is placed in the air stream or belt driven by a motor installed externally.

Tubeaxial fans can operate at much higher pressures and have better operating efficiencies compared to normal propeller fans. They are used for low to medium pressure and high air flow applications.

A typical performance curve for a tubeaxial fan is shown in Figure 4.4. As can be seen from the figure, when the operating pressure reduces, the air flow increases. The fan power also reduces with increase in air flow. However, at low air flow rates, there is a region of instability that has to be avoided by ensuring that the fan operating point is to the right hand side of this region.

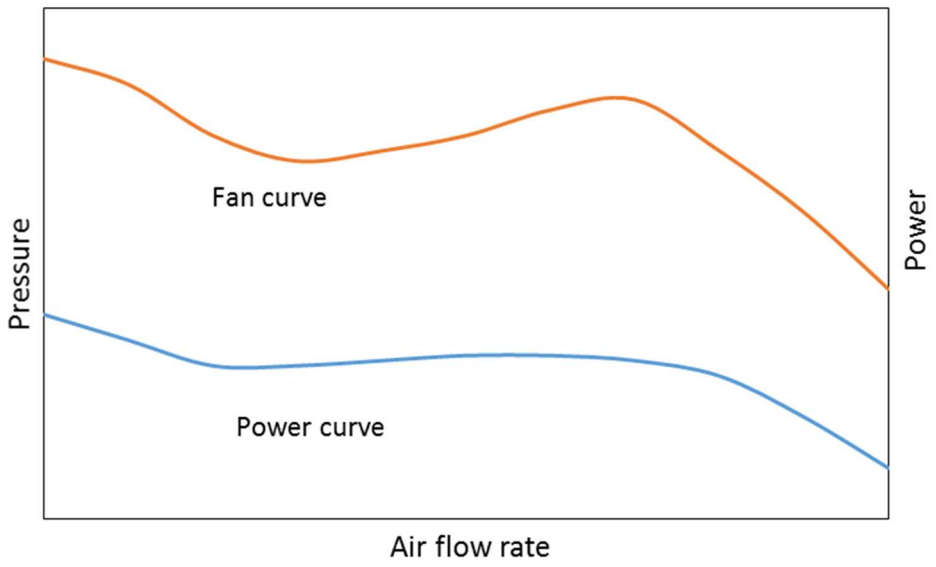

Figure 4.4 Typical performance curve for tubeaxial fans

Forward curved centrifugal fans

In this type of fan, the rotor has small blades at the tip of the impeller that curve in the direction of rotation. They are generally smaller in size and have a lower operating efficiency. Forward curved fans are not suitable for high pressure applications and are normally used for relatively clean service applications. One of the common applications of this type of fan is in high temperature furnaces and boilers.

As shown in Figure 4.5, these fans have an overloading power characteristic where the power drawn by the motor keeps increasing when the fan reaches free delivery (low pressure). Therefore, the operating point of forward curved fans have to be carefully selected to prevent overloading the motor.

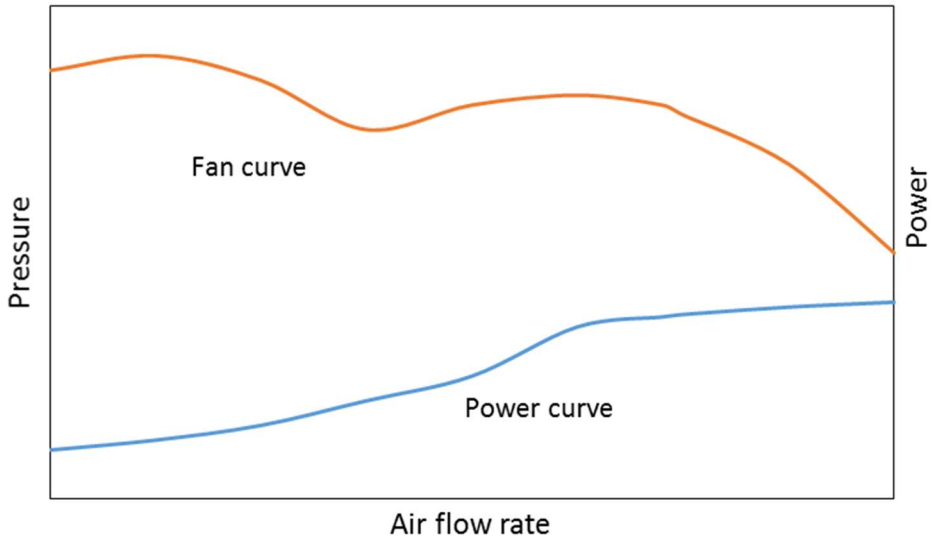

Figure 4.5 Typical performance curve for forward-curved fans

Backward inclined centrifugal fans

There are three types of fans with backward inclined blade shapes. They are flat, curved and airfoil. Although the flat blade type is more robust, curved blade fans are more efficient. Out of the two curved blade fans, airfoil blades are more efficient, but because they rely on the lift created by each blade, this fan type is highly susceptible to unstable operation caused by stalling. Therefore, the most commonly used type of backward inclined fans is with the curved blades. A typical fan performance characteristic for backward curved fans is shown in Figure 4.6. As can be seen from the figure, this type of fan does not have a region of instability or an overloading power characteristic.

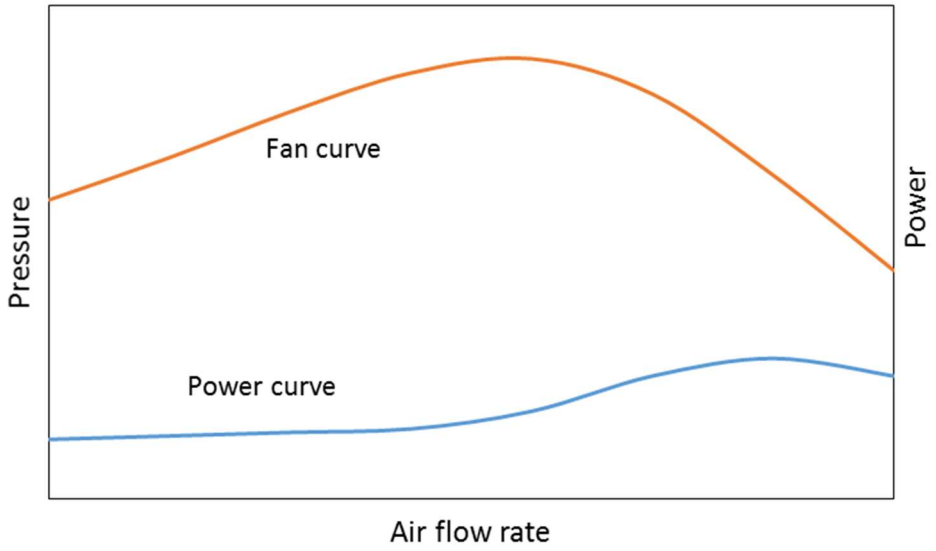

Figure 4.6 Typical performance curve for backward curved fans

Their key characteristics and applications of the three main types of fans are summarised in Table 4.1.

Fan type	Service application	Air flow	Pressure	Efficiency
Tubeaxial	Clean air	High	Low	60 – 80%
Centrifugal – forward curved	Clean air	Low and medium	Low	55 – 65%
Centrifugal – backward inclined	Clean / dirty air	Low	High	65 – 90%

Table 4.1 Performance comparison of common types of fans

Figures 4.7, 4.8 and 4.9 show typical fan curves with fan efficiency and optimum operating range for axial, centrifugal forward curved and centrifugal backward inclined fans.

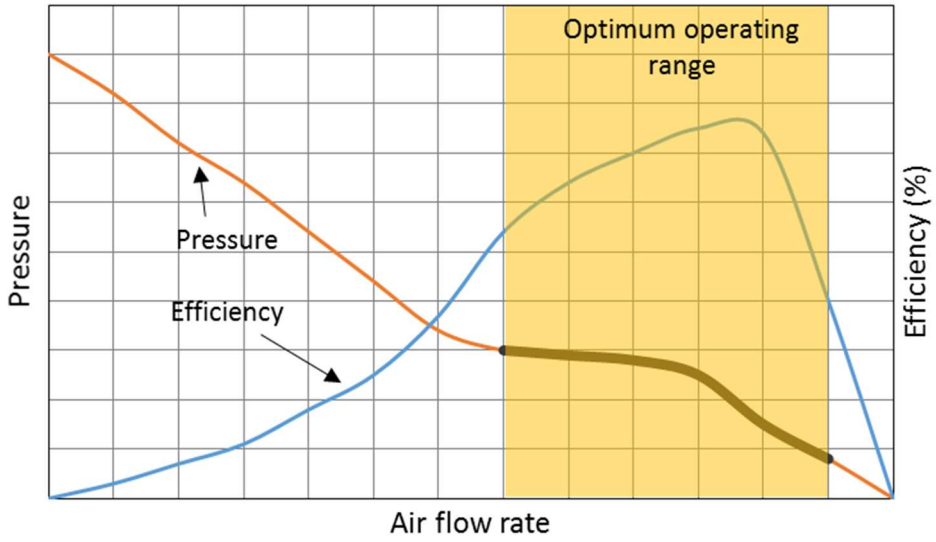

Figure 4.7 Optimum operating range for axial fans

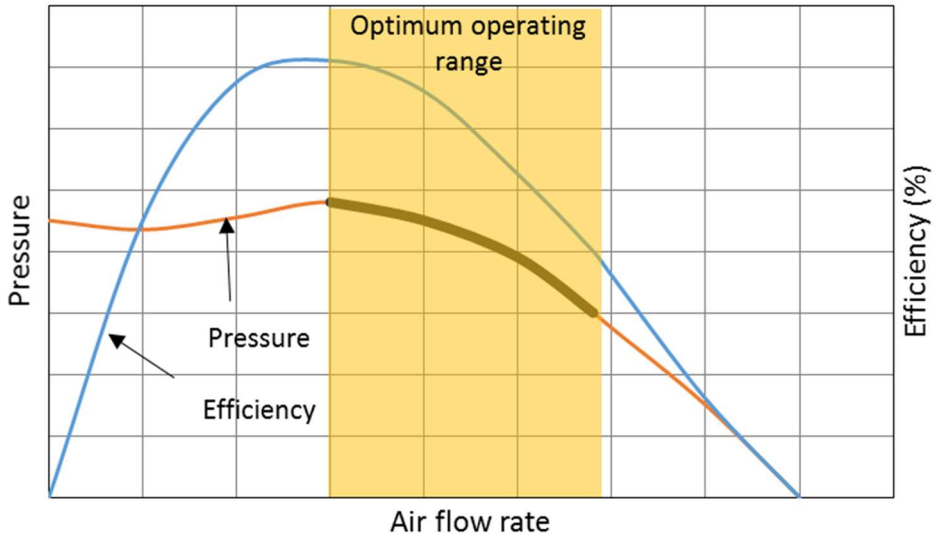

Figure 4.8 Optimum operating range for centrifugal forward curved fans

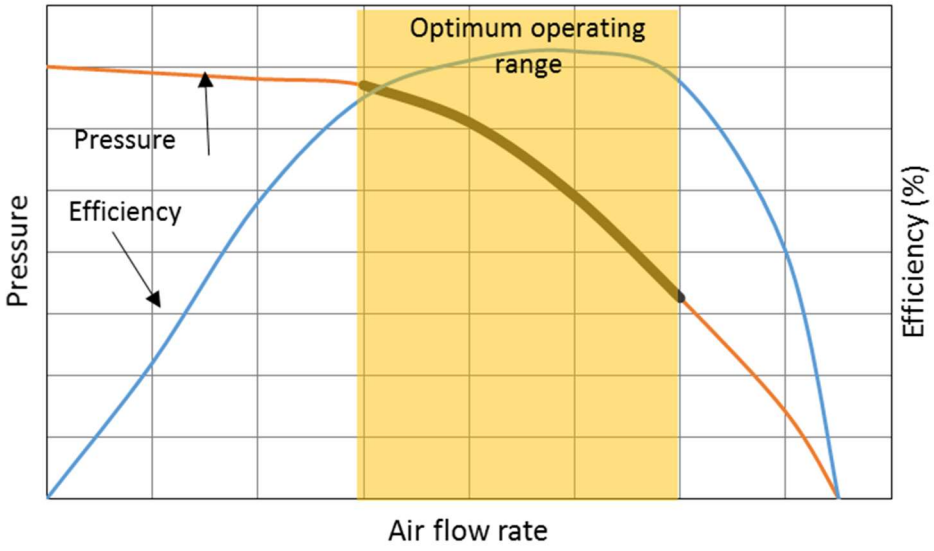

Figure 4.9 Optimum operating range for centrifugal backward inclined fans

In summary, forward curved centrifugal fans are generally less efficient than tubeaxial and backward curved centrifugal fans but are commonly used for low static pressure applications due to their relatively lower cost. Backward curved centrifugal fans and tubeaxial fans are relatively more efficient with highest achievable efficiencies of 90% and 80% respectively. Therefore, backward curved centrifugal fans should be used for low volume and high pressure applications while tubeaxial fans should be used for high volume and low pressure applications.

4.2 Fan and system characteristics

Fans and fan systems are normally rated based on pressure and flow rate. The two parameters are dependent on each other as the air flow rate produced by a fan depends on the system pressure (the pressure against which it needs to work).

The system resistance of a ducting system is the total sum of all pressure losses encountered in the system due to fittings, filters, ducting, dampers and various equipment.

The system curve is a plot of the system resistance encountered at different volumes of air flow. The system resistance varies with the square of the airflow and the curve is parabolic in shape. Similarly, the relationship between the flow and pressure developed by a fan is called a fan curve (Figure 4.10).

A fan curve shows the relationship between flow rate and pressure for a fan of a particular diameter operating at a fixed speed. It provides all the different operating points of a fan as its discharge is throttled from zero to full flow. Since fans can operate at different speeds and with different impeller sizes, usually fan curves for different fan speeds and impeller sizes are plotted on the same axis.

The actual shape of a fan curve depends on the type of fan used. The performance of some fans such as axial flow fans also depend on the blade angle which is adjustable. For such fans, manufacturers provide a “family of curves” showing fan performance at different blade settings. Fan curves also include data such as the fan shaft power required and operating efficiency under different operating conditions.

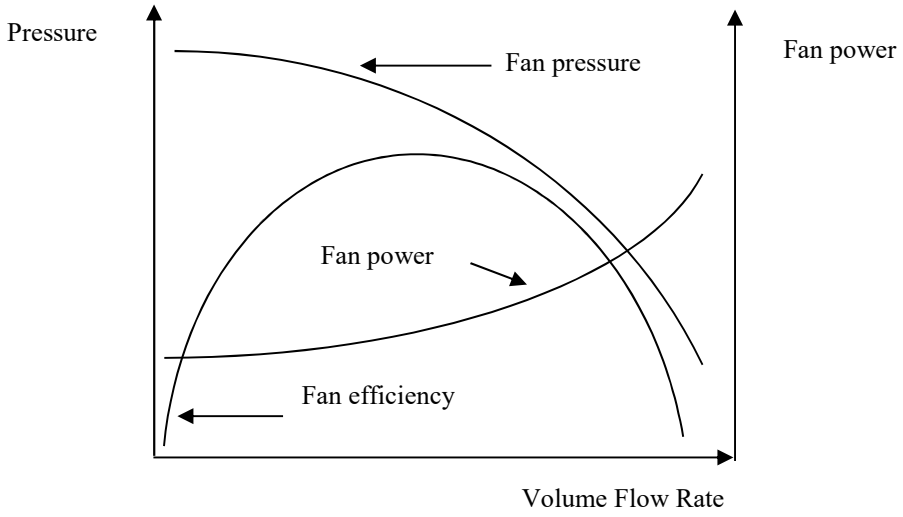

Figure 4.10 Typical fan curves provided by manufacturers

4.3 Fan selection

The system operating point is the point on the system resistance curve which corresponds to the required airflow condition. A fan selected for a particular application has a performance curve intersecting the system curve at the desired operating point (Figure 4.11).

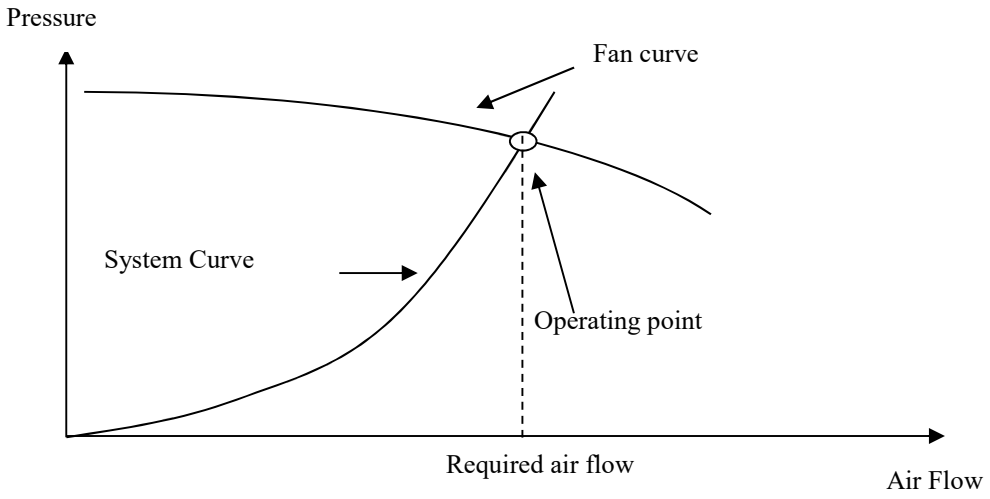

Figure 4.11 Matching of system and fan curves

Once the operating point is identified on the fan curve, the fan operating efficiency and fan shaft power can also be obtained from the fan characteristic curves as shown in Figure 4.12.

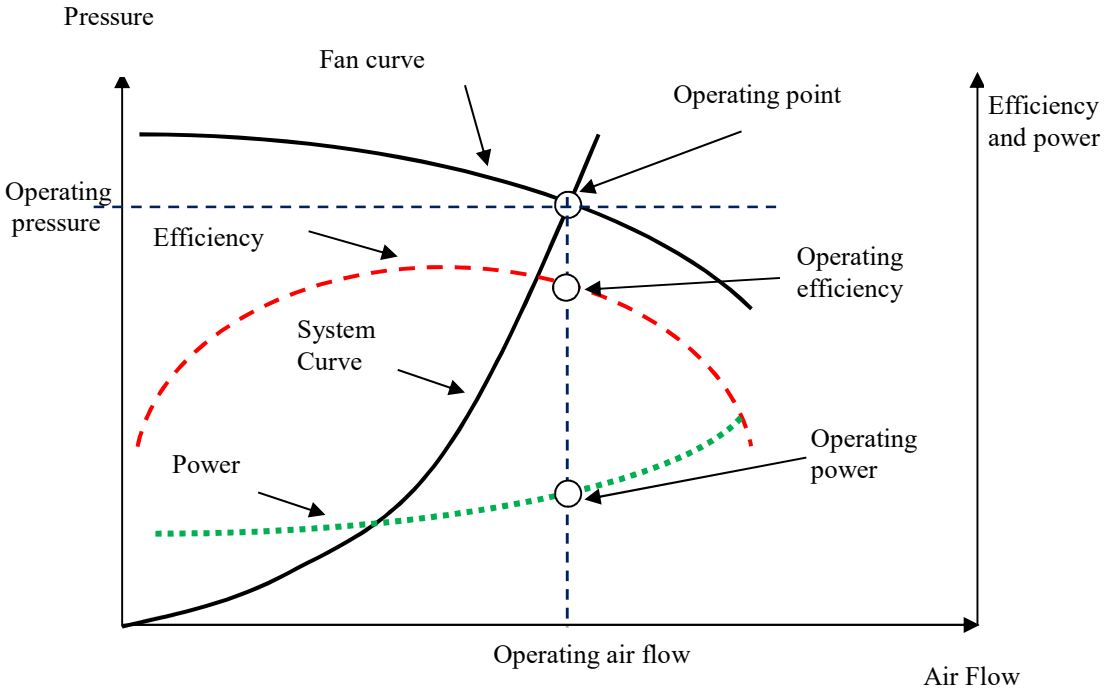

Figure 4.12 Fan efficiency and fan power on fan curve

Fans can be installed to operate as a single fan or in multiple fan systems in series or parallel with other fans.

In series fan operation, the total air flow remains the same as the air flow rate for one fan, but the pressure developed is the sum of the pressures developed by the individual fans.

Similarly, in parallel operation, the pressure developed by the fans is the same as the pressure developed by one fan, while the total air flow becomes the sum of the air flow rates for the individual fans.

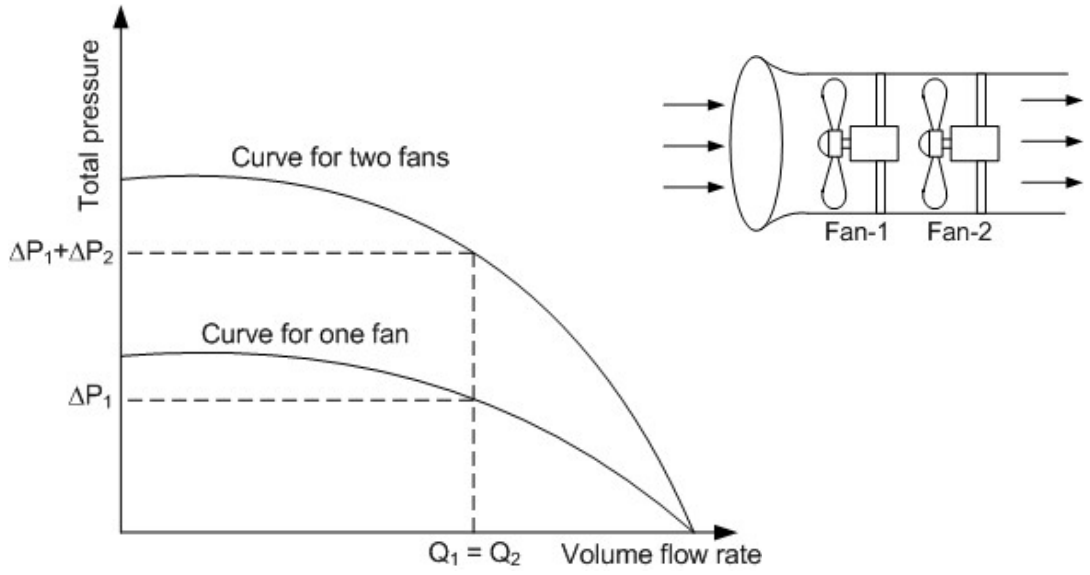

Figure 4.13 Operation of fans in series

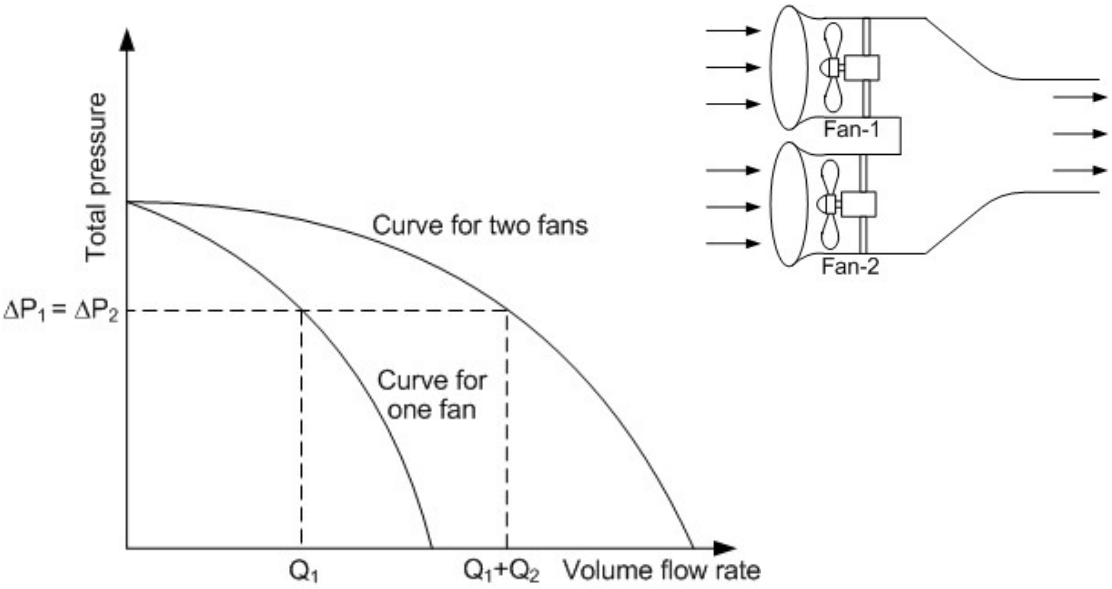

Figure 4.14 Operation of fans in parallel

In applications where the air flow quantity to be transported varies significantly, two or more smaller fans can be installed in parallel in place of one large fan so that the

fan capacity (number of fans in operation) can be varied to match the demand. Such a design can help to operate the fans closer to their best efficiency point under different load conditions, rather than modulating the capacity of one large fan, which could lead to lower fan operating efficiency.

4.4 Theoretical fan power consumption

The power consumed by fans (fan brake horsepower or impeller shaft power) is proportional to the product of the volume flow and pressure developed.

$$\text{Fan impeller power} \propto \frac{\text{Air flow rate x Pressure developed}}{\text{Efficiency}} \tag{4.1}$$

In SI units:

$$\text{Fan shaft power (kW)} = \frac{\text{Flow rate (m}^3\text{/s) x Pressure (Pa)}}{\text{1000 x Fan efficiency}} \tag{4.2}$$

In Imperial units:

$$\text{Fan brake horsepower} = \frac{\text{Flow rate (cfm) x Pressure difference (in. water)}}{\text{6350 x Efficiency}} \tag{4.3}$$

Therefore, based on equations (4.1) to (4.3), fan power consumption can be lowered by reducing the air flow rate, reducing system pressure losses and improving fan efficiency. These are the main strategies employed to reduce energy consumption of fans and fan systems.

4.5 Fan efficiency

Fan efficiency is an indication of how much of the input shaft power is converted to useful air power by the fan. Rearranging equation (4.2), fan efficiency can be expressed as:

$$\text{Fan efficiency (\%)} = \frac{\text{Flow rate (m}^3\text{/s) x Pressure (Pa)}}{\text{Shaft power (W)}} \text{ x } 100\% \tag{4.4}$$

Normally, centrifugal fans used in air distribution systems are forward curved or backward curved fans. Forward curved fans rotate at relatively slow speed and generally are used for producing high volumes at low static pressure. The maximum

static efficiency of forward curved fans is usually above 70% and occurs at less than 50% of the maximum air flow. The fan power curve has an increasing slope and is referred to as an “overloading type”. The advantage of these fans is that they are relatively low cost.

Backward inclined fans operate at about twice the speed of forward curved fans. The maximum static efficiency is higher and is about 80% and occurs at about 60% to 70% of the maximum flow (Figure 4.15). The advantage of backward inclined fans is their higher efficiency and non-overloading characteristic for the power curve. However, they are normally costlier than forward curved fans.

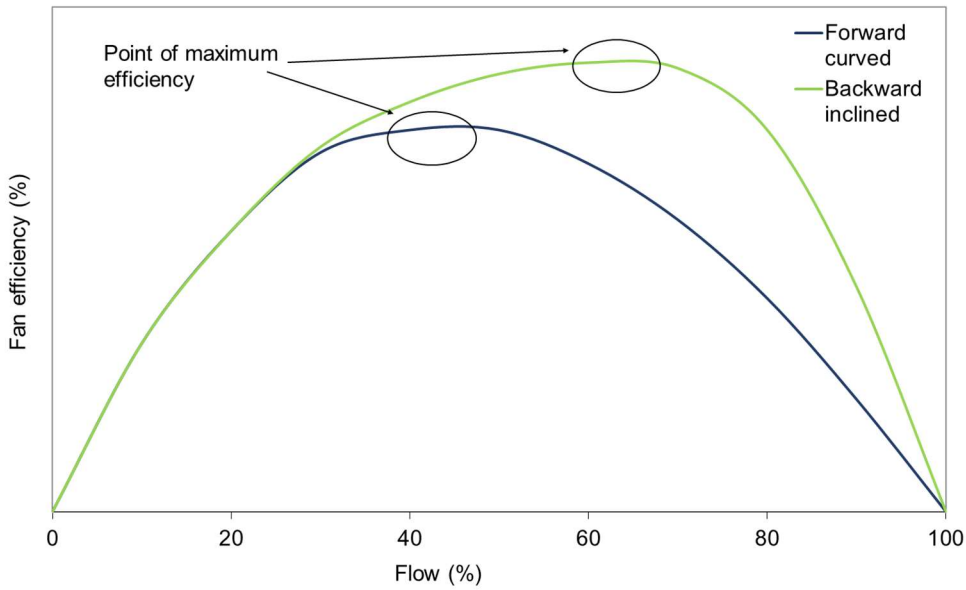

Figure 4.15 Fan efficiency for forward curved and backward inclined fans

Fan efficiency also depends on the operating point as shown in the Figure 4.16. Although a backward inclined fan may have a maximum static efficiency of 80%, it may operate at 60% static efficiency at the operating point. Therefore, when a fan is selected for an application, the fan should be selected so that it operates at its highest efficiency at the desired operating point.

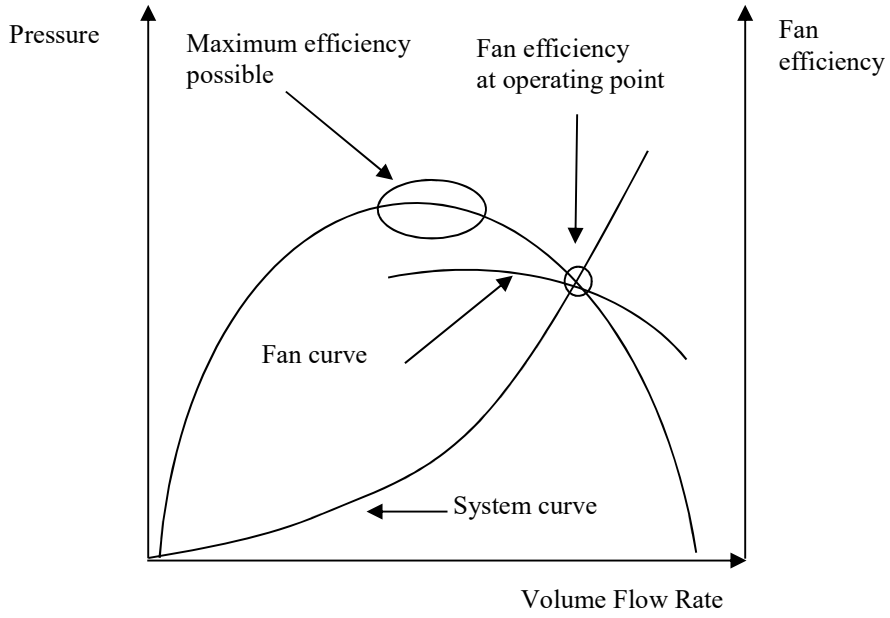

Figure 4.16 Fan efficiency at operating point

The efficiency of fans is also dependent on the impeller size. Generally, fans with larger impeller sizes have a much higher peak efficiency compared to those with smaller size impellers, as shown in Figure 4.17.

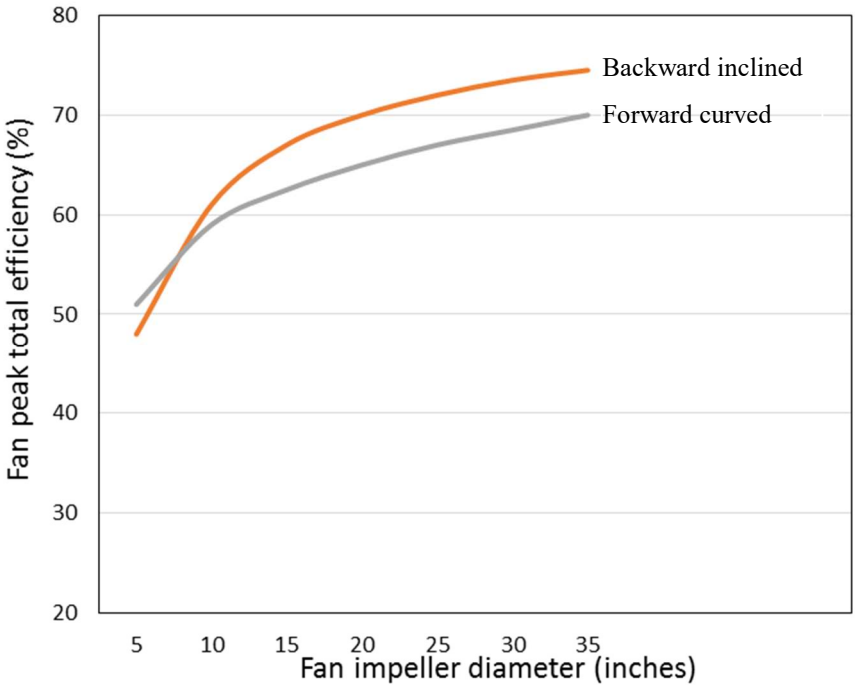

Figure 4.17 Fan efficiency vs impeller size

Example 4.1

A fan is being selected for an application which requires an airflow rate of 20,000 m^3/h and a total pressure of 1,000 Pa. Compute the reduction in fan shaft power that can be achieved for this application if a fan with 70% efficiency is used instead of one with 65% efficiency.

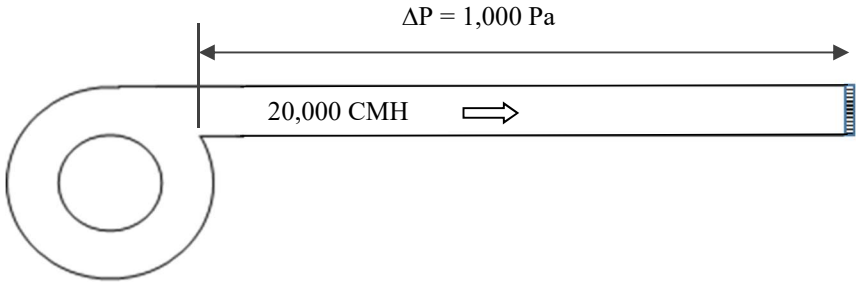

Figure for example 4.1

Solution

Using equation (4.2),

$$\text{Fan shaft power (kW)} = \frac{\text{Flow rate (m}^3\text{/s) x Pressure (Pa)}}{\text{1000 x Fan efficiency}}$$

Fan power for fan with 65% efficiency:

$$\text{Fan shaft power (kW)} = \frac{20{,}000 \ / \ 3600 \text{ (m}^3\text{/s) x 1000 (Pa)}}{\text{1000 x 0.65}} = 8.55 \text{ kW}$$

Fan power for fan with 70% efficiency:

$$\text{Fan shaft power (kW)} = \frac{20{,}000 \ / \ 3600 \text{ (m}^3\text{/s) x 1000 (Pa)}}{\text{1000 x 0.70}} = 7.94 \text{ kW}$$

Therefore, the reduction in fan shaft power is (8.55 – 7.94) kW = 0.61 kW

Fan efficiency grade

Larger size fans are more efficient than smaller size fans (Figure 4.17) mainly due to non-geometric manufacturing tolerances, disproportionate bearing losses and aerodynamic factors that have a bigger influence on smaller fans than on larger fans. Therefore, it is not practical to specify a single minimum efficiency value for all fans because if the value is set for larger size fans (example 65%), most small fans may not be able to achieve this value.

Air Movement and Control Association (ACMA) standard 205 developed a metric called fan efficiency grade (FEG) that rates the ability of a fan to convert the shaft power (excluding motor and drive losses) to useful air power. The FEG values are calculated from data taken at peak total efficiency point on a fan curve developed during fan testing.

The FEG ratings are a series of curves which relate fan peak efficiency to impeller diameter as shown in Figure 4.18. The curves range from FEG50 which is the lowest rating to FEG90 which is the highest rating.

The fan efficiency bands were generated by collecting fan efficiency data on a variety of fan types and sizes from manufacturers around the world. The efficiencies were plotted and the bands were developed from the data. The shape of the discrete bands helps accommodate an entire fan product line with the same FEG rating. As defined by AMCA 205, a fan belongs to a FEG if, for the fan impeller diameter, the fan peak efficiency falls between the upper and lower limits for that grade.

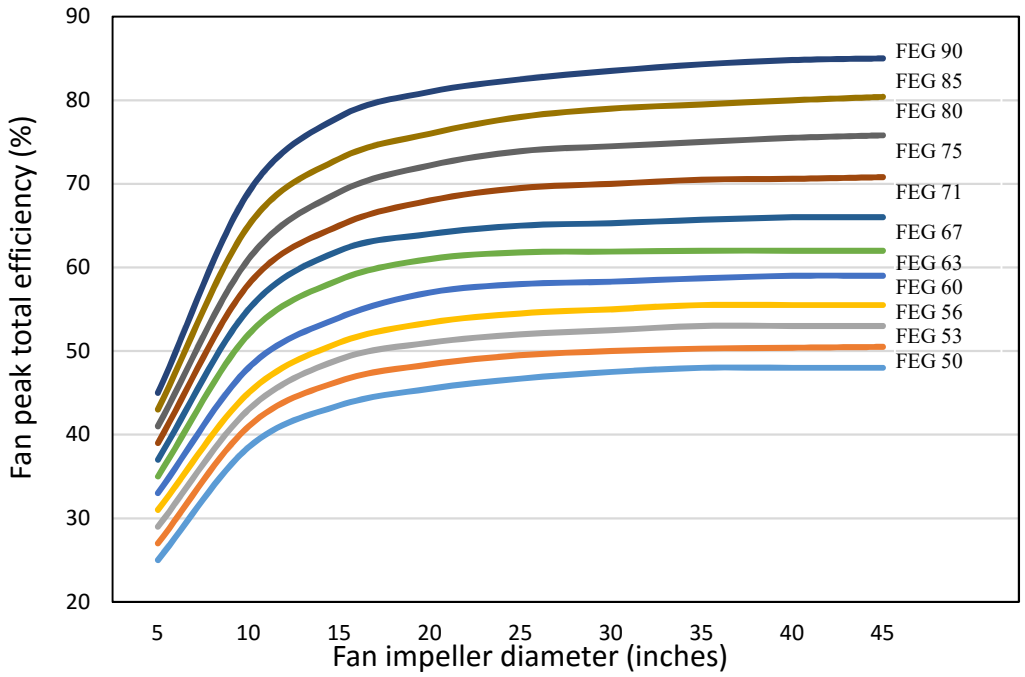

Figure 4.18 FEG curves (courtesy of AMCA)

A FEG is a numerical rating that classifies fans by their aerodynamic ability to convert mechanical shaft power or impeller power in the case of a direct driven fan to air power. It provides an indication of fan energy efficiency, allowing designers to more

easily differentiate between fan models that are relatively more or less energy efficient. FEGs apply to the efficiency of the fan only and not to the motor and drives. FEG ratings can be applied to custom built single fans and to series-produced fans manufactured in large quantities.

Using the FEG ratings, a designer for instance can specify that all fans used for a particular project has to meet a minimum standard of FEG71, rather than specifying individual efficiency values for each fan.

Example 4.2

If the fan diameter is 25 inches and the measured peak efficiency is 67%, what is the FEG rating for the fan?

Solution

Using the FEG curves, the intersecting point for 25-inch impeller diameter and peak efficiency of 67% lies in the FEG71 band. Therefore, the fan can be considered to have an FEG71 rating.

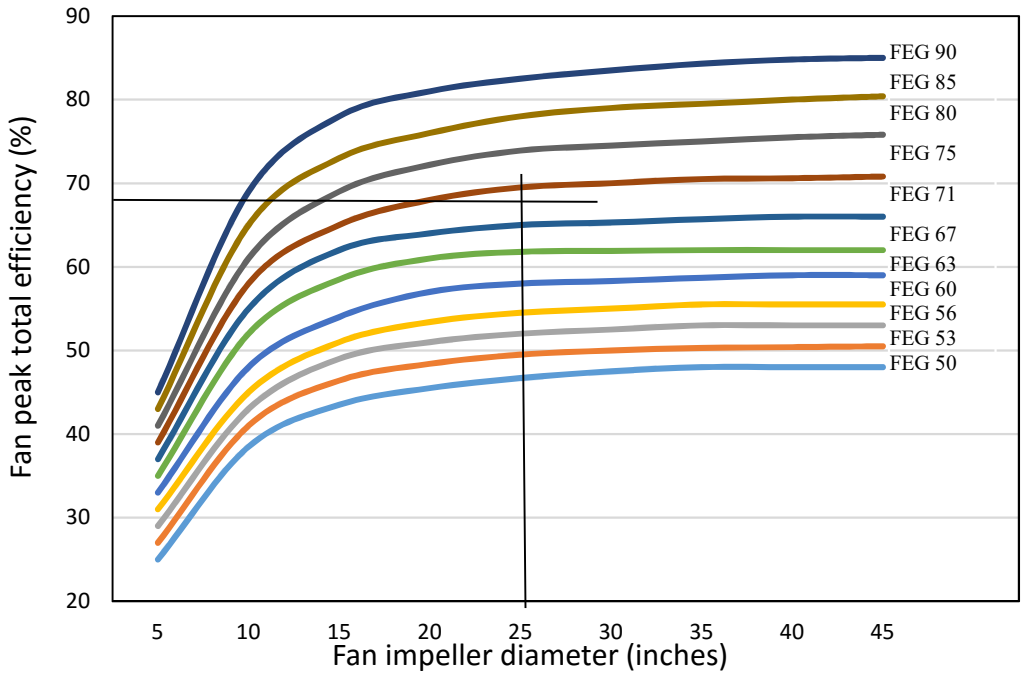

Figure 4.19 Figure for example 4.2

Although a fan has a high peak efficiency, it may happen that the fan is selected to operate at a point that is not near the peak efficiency. Therefore, AMCA 205 states that the fan operating efficiency at all intended operating point(s) shall not be less than

15 percentage points (reduced to 10% in AMCA 205:2012) below the fan peak total efficiency (illustrated in Figure 4.20). International Green Construction Code (IgCC) 2012 specifies a minimum FEG rating and requires the sizing and selection of fans to be 10 percentage points from the peak total efficiency. Similarly, ASHRAE 90.1:2013 specifies a minimum FEG rating and requires the sizing and selection of fans to be 15 percentage points from the peak total efficiency.

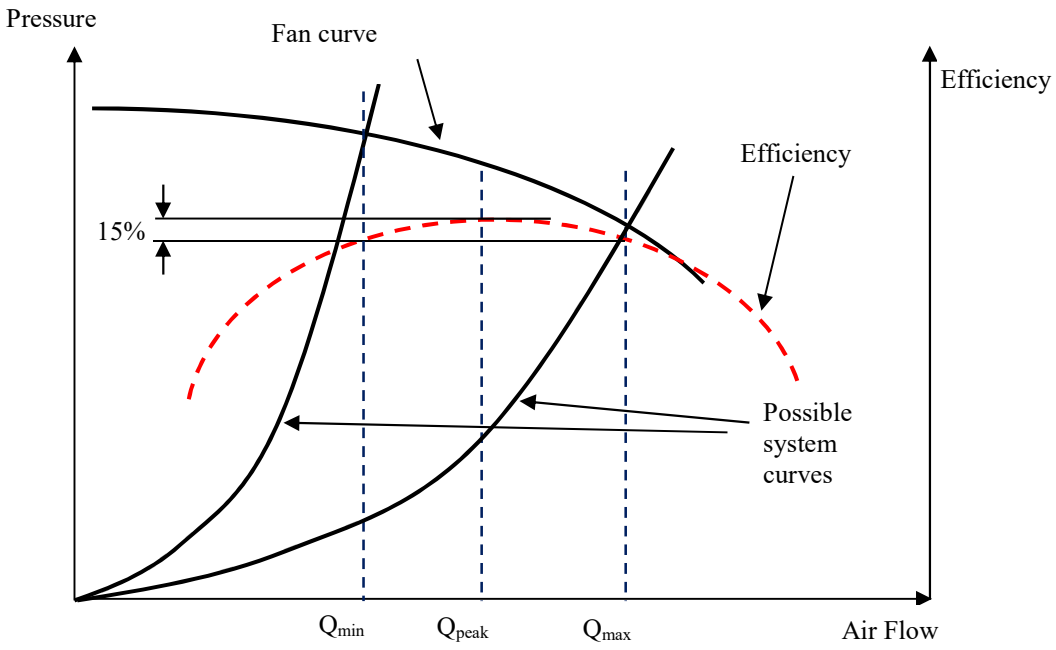

Figure 4.20 Allowable selection range based on operating within 15% of peak efficiency

Fan Efficiency Index

Since the fan performance at its peak efficiency is poorly correlated with the fan efficiency and power use at its design operating point, FEG ratings are not adequate to ensure optimum fan selection. Therefore, another rating called Fan Efficiency Index (FEI) is used by the Department of Energy, USA (DOE). This fan efficiency metric is based on a maximum power input adjusted by a formula tied to the design point flow and pressure.

FEI is the ratio of the DOE standard's maximum allowable power drawn by the fan motor to the actual fan electrical power at the design point. Since FEI of 1.0 implies that the fan consumes the maximum allowable power, FEI of 1.0 or greater is considered to be acceptable and meeting the DOE standard. For example, FEI of 1.1 indicates that the fan will use 10% less energy than the DOE standard. This makes

FEI very useful as it provides the user an immediate indication of the percentage savings achievable relative to a fixed benchmark of DOE regulation at design conditions.

$$\text{FEI} = \frac{\text{Selected fan efficiency}}{\text{Baseline fan efficiency}} \quad (4.5)$$

$$\text{FEI} = \frac{\text{Baseline fan electrical power}}{\text{Selected fan electrical power}} \quad (4.6)$$

Since electrical power drawn by the fan motor is the sum of the fan shaft power and the losses in the drive and motor, the baseline fan electrical power can be expressed as:

W_i = H_i + AMCA 203 belt losses + IE3 motor losses (4.7)

Where,

W_i = baseline fan electrical power

H_i = baseline fan shaft input power

AMCA 203 belt losses (Table 4.2)

IE3 motor losses = losses for IE3 compliant motor

Baseline fan shaft input power (W), $H_{i,ref} = \frac{(Q_i + Q_o)\left(P_i + P_o \times \frac{\rho}{\rho_{std}}\right)}{1000 \times \eta_o}$ (4.8)

where,

Q_i = selected fan airflow, m^3/s

P_i = selected fan total (ducted) or static pressure (non-ducted), Pa

ρ = air density, kg/m^3

ρ_{std} = standard air density, kg/m^3

Q_o = 0.118 m^3/s (250 cfm)

P_o = 100 Pa (0.4 in water gauge)

η_o = 66% for ducted and 60% for non-ducted applications

Motor size (kW)	0.75	1.5	3.0	7.5	15	30	60	75	150
Average belt drive losses (%)	9.5	8.5	8.0	5.0	4.8	4.5	4.2	4.1	4.0

Table 4.2 AMCA 203-90 Belt Losses (courtesy of AMCA)

The FEI values required to meet DOE and ASHRAE 90.1 is 1.0 while the target value for ASHRAE 189.1 is 1.1 as shown in Table 4.3.

Standard	Target FEI
DOE	FEI ≥ 1.0 (at design point)
ASHRAE 90.1	FEI ≥ 1.0 (at design point)
ASHRAE 189.1	FEI ≥ 1.1 (at design point)

Table 4.3 Target FEI for various standards

The FEI value and compliance range for a fan can be indicated on the fan curve as shown in Figure 4.21.

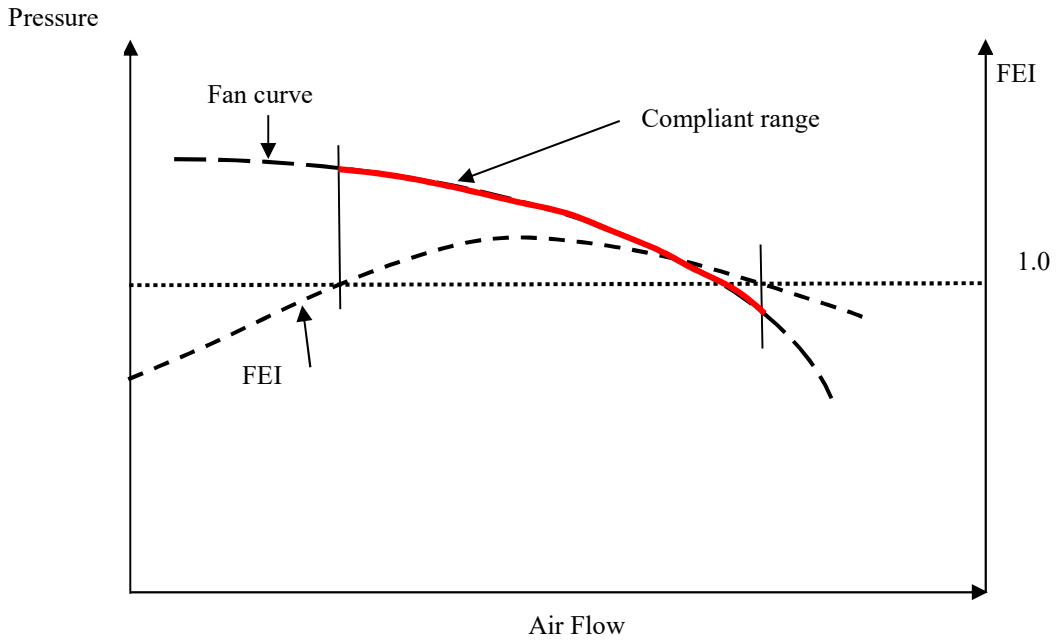

Figure 4.21 FEI compliant range for a fan at a particular speed

A comparison of FEG and FEI for different sizes of one particular fan model is shown in Table 4.4. As can be seen from the table, a single FEG (e.g. FEG 85) can result in different FEI values from as low as 0.67 to as high as 1.39 for different fan sizes.

Fan size (mm)	FEG	FEI
460	85	0.67
510	85	0.83
560	85	0.99
610	85	1.16
685	85	1.28
770	85	1.39
920	85	1.32

Table 4.4 Comparison of FEG and FEI for a particular fan model

4.6 Overall fan efficiency

Since it is not possible to measure the fan impeller power (except under laboratory conditions), it is more convenient to consider the fan overall efficiency, which includes the losses in the drive components like the motor, belts and variable frequency drive (if used).

Figure 4.22 shows a typical drive system for a fan which consists of a VSD (inverter drive), motor and a belt drive.

The overall drive efficiency,

$\eta_{overall} = \eta_{VSD} \times \eta_{motor} \times \eta_{drive} \times \eta_{fan}$

Where,

η_{VSD} = efficiency of the VSD

η_{motor} = efficiency of the motor

η_{drive} = efficiency of the belt drive

η_{fan} = efficiency of fan

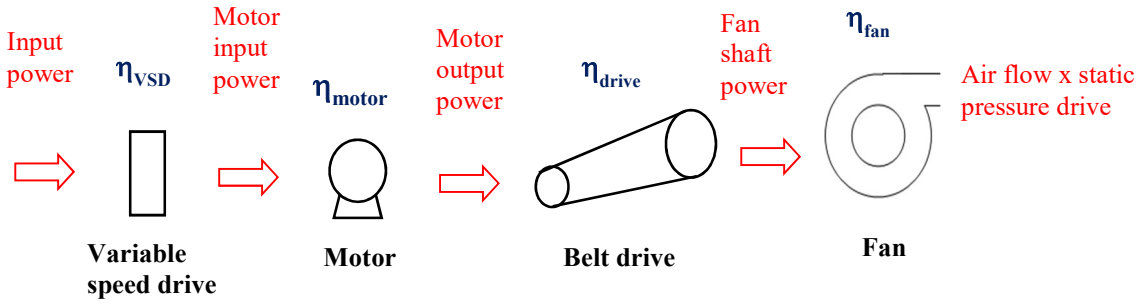

Figure 4.22 System efficiency illustration for a fan system

Example 4.3

The VSD, motor, belt drive and fan efficiency are 96%, 93%, 95% and 65% respectively. Compute the overall drive efficiency of the system.

Solution

$\eta_{overall} = \eta_{VSD} \times \eta_{motor} \times \eta_{belt\ drive} \times \eta_{fan}$

$= 0.96 \times 0.93 \times 0.95 \times 0.65$

$= 0.55\ (55\%)$

Equation (4.2) can be expressed using the input electrical power instead of the fan shaft power as follows:

$$\text{Input electrical power (kW)} = \frac{\text{Flow rate } (m^3/s) \times \text{Pressure (Pa)}}{1000 \times \text{Overall system efficiency}} \qquad (4.9)$$

Example 4.4

The total static pressure for a fan is measured to be 1000 Pa when the air flow rate is 50,000 cubic metre per hour (CMH). If the electrical power input to the VSD is measured to be 25 kW, compute the overall system efficiency.

Solution

Equation (4.9) can be rearranged as:

$$\text{Overall system efficiency} = \frac{\text{Flow rate } (m^3/s) \times \text{Pressure (Pa)}}{1000 \times \text{Input electrical power (kW)}}$$

$$\text{Overall system efficiency} = \frac{(50{,}000 / 3600)\ (m^3/s) \times 1000\ (Pa)}{1000 \times 25\ (kW)} = 0.56\ (56\%)$$

Efficiency of low capacity fan motors

Small fans used for low capacity applications (air flow rate as low as 0.3 m^3/s), like those found in fan coil units (FCUs) in space cooling applications, require low shaft power which is typically less than 1 kW. The motors used for such fans are single phase, permanent split capacitor type motors which operate at an efficiency of between 30% to about 50%. For such applications, electronically commutated (EC) motors which are essentially DC brushless motors having an operating efficiency of more than 50% can be used. Figure 4.23 shows a comparison of efficiency between conventional AC motors and EC motors which indicates that efficiency gain of about 40% can be achieved by using EC motors for such applications.

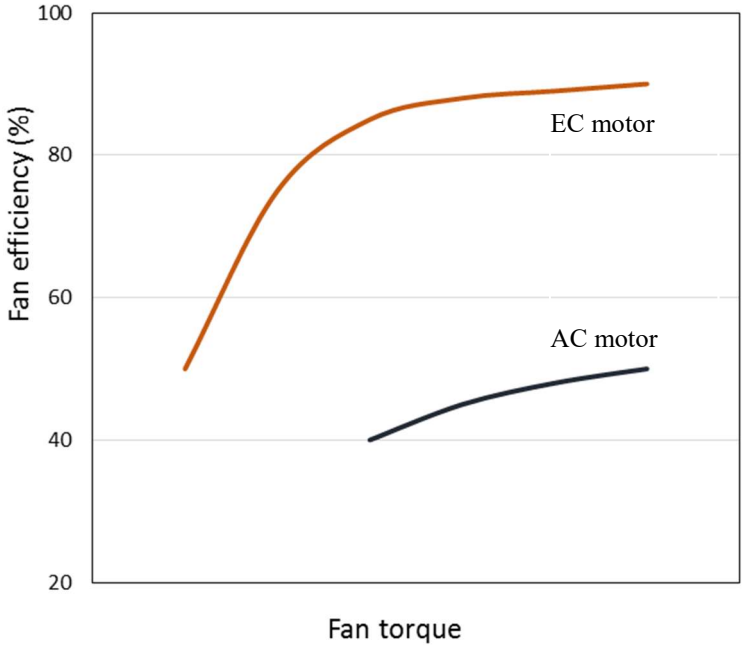

Figure 4.23 Efficiency comparison for AC and EC motors

A comparison of fan power for air-conditioning fan coil units with AC and EC motors for a typical 3-row cooling coil with 60 Pa external static pressure is shown in Table 4.5. As can be seen from the data, motor power for EC motors can be 20% to 50% less than for AC motors.

Air flow (l/s)	AC motor power (W)	EC motor power (W)
150	82	42
250	114	88
300	190	117

Table 4.5 Comparison of motor power for fan coil units

4.7 Affinity laws

The performance levels of fans under different conditions are related by the fan affinity laws given in Table 4.6. The fan affinity laws relate fan speed and impeller diameter to air flow, pressure developed by the fan and impeller power.

The fan affinity laws are used by manufacturers to estimate the performance of fans of different impeller sizes and at different operating speeds. Since the speed of fans can be easily changed by changing the size of the pulley or by installing VSDs, the fan laws are very useful to system designers. The fan laws can be used to estimate the performance of fans at different speeds.

	Change in speed (N)	Change in impeller diameter (D)
Flow (Q)	$Q_2 = Q_1\left(\frac{N_2}{N_1}\right)$	$Q_2 = Q_1\left(\frac{D_2}{D_1}\right)^3$
Pressure (Δp)	$\Delta p_2 = \Delta p_1\left(\frac{N_2}{N_1}\right)^2$	$\Delta p_2 = \Delta p_1\left(\frac{D_2}{D_1}\right)^2$
Power (P)	$P_2 = P_1\left(\frac{N_2}{N_1}\right)^3$	$P_2 = P_1\left(\frac{D_2}{D_1}\right)^5$

Table 4.6 Fan affinity laws

Example 4.5

A fan delivers 4 m^3/s at 1450 rpm and consumes 25 kW. Calculate the new air flow rate and power consumption if the fan speed is reduced to 1250 rpm.

Solution

Q_1 = 4 m^3/s

P_1 = 25 kW
N_1 = 1450 rpm
N_2 = 1250 rpm
$Q_2 = Q_1 \times (N_2 / N_1) = 4 \times (1250 / 1450) = 3.45\ m^3/s$
$P_2 = P_1 \times (N_2 / N_1)^3 = 25 \times (1250 / 1450)^3 = 16$ kW

This example also shows that when the speed is reduced by 14% (1450 rpm to 1250 rpm), theoretically the power consumption reduces by about 36% (25 kW to 16 kW). It should be noted that this calculation does not take into account the change in fan efficiency due to change in operating speed.

Limitations when using affinity laws

Affinity laws are widely used to estimate energy savings that can be achieved from fan systems when the air flow rate or system pressure is reduced. However, there are three important factors that should be noted when using the affinity laws to ensure that energy savings are not overestimated.

Firstly, the application of affinity laws assumes that the efficiency of the fan, motor and drive remain constant. This is a reasonable assumption to make when the fan speed variation is not very great because the change in fan, motor and drive efficiency may not be very substantial. However, if the fan speed is reduced significantly, the drop in the efficiency of the motor and fan can be significant. For example, if the speed of a fan motor consuming 10 kW is reduced by 50%, the resulting motor power can be estimated using the affinity laws to be 1.25 kW (10×0.5^3). However, this estimate will not be realistic as the efficiency of the motor and the fan may also drop by 50% at the operating condition, which will result in much higher power consumption at the reduced speed.

The second point to note is that most motors rely on the cooling fan mounted on the motor drive shaft to dissipate heat generated by the motor. Therefore, when the fan speed is reduced to say 20% of the original speed, the cooling fan may not be able to remove sufficient heat and can lead to overheating of the motor. In many applications, the motor speed can be reduced to about 40% of the rated speed without motor overheating. In cases where the airflow generated by the fan is at a low temperature and passes over the motor (e.g. AHUs and cooling towers), the motor speed can be reduced to less than 50% of the rated speed due to cooling of the motor by the air stream.

The third point to note is that the affinity laws are applicable only in variable torque applications where a reduction in fan speed or fan air flow results in a pressure reduction which is proportional to its second power ($\Delta P \propto Q^2$). It cannot be applied in a situation where only the air flow is reduced but the system pressure needs to remain constant.

4.8 System losses

When air flows in ducting systems, there is pressure drop due to “friction losses” and “dynamic losses” caused by change of direction or velocity in ducts and fittings.

Friction losses are due to fluid viscous effects and can be expressed by means of D’Arcy’s equation

$$\Delta P_f = \frac{f.L.v^2}{2.g.D_m} \qquad (4.10)$$

where

ΔP_f = frictional pressure drop

f = friction factor

L = length of duct

v = mean duct velocity

g = acceleration due to gravity

D_m = hydraulic mean diameter $= \frac{\text{cross - sectional area}}{\text{perimeter}}$

To simplify the task of ducting system design, friction losses per unit length for various duct sizes and materials are generally expressed in the form of charts and tables and are available in reference books such as the ASHRAE Handbook of Fundamentals.

In good ducting system designs, to minimise friction losses, the cross-section of ducts is usually selected so as to maintain friction losses of between 1 to 2 Pa/m. Table 4.7 provides a list of sizes selected to maintain the friction losses in the region of 1 to 2 Pa/m for galvanized ducts.

Dynamic losses occur due to a change in flow direction caused by fittings such as elbows, bends and tees and change in area or velocity caused by fittings such as diverging sections, contracting sections, openings and dampers.

Normally, dynamic pressure losses (ΔP_d) are proportional to the velocity pressure and can be expressed as

$$\Delta P_d = C_o . P_v \quad (4.11)$$

where,

C_o = dynamic loss coefficient dependent on the geometry of the particular fitting

and, P_v = velocity pressure ($\frac{1}{2}\rho v^2$).

(ρ is the density of air)

The value of C_o is measured experimentally and is available in design reference guides. Example values of dynamic loss coefficient are listed in Tables 4.8 a, b and c (data provided is only for illustrative purposes).

Air flow rate (l/s)	**Recommended round duct diameter (mm)**
50	160
200	250
500	315
1,000	400
2,000	630
5,000	800
10,000	1,000
20,000	1,250

Table 4.7 Round duct sizes for various air flow rates

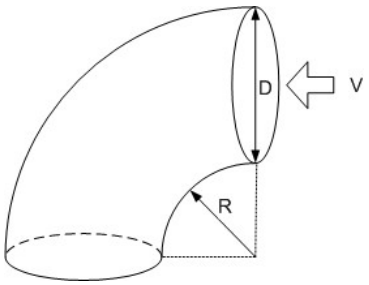

R/D Ratio	C_o
0.25	0.45
0.50	0.34
1.0	0.24
1.5	0.23
2.5	0.22

Table 4.8 a Typical dynamic loss coefficient for 90^0 bends

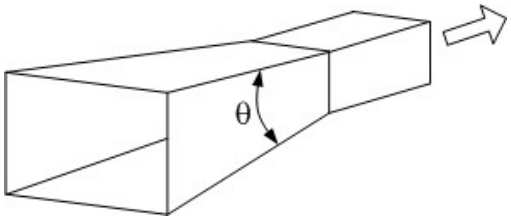

θ	C_o
15	0.008
30	0.02
45	0.04
65	0.07

Table 4.8 b Typical dynamic loss coefficient for duct transformations

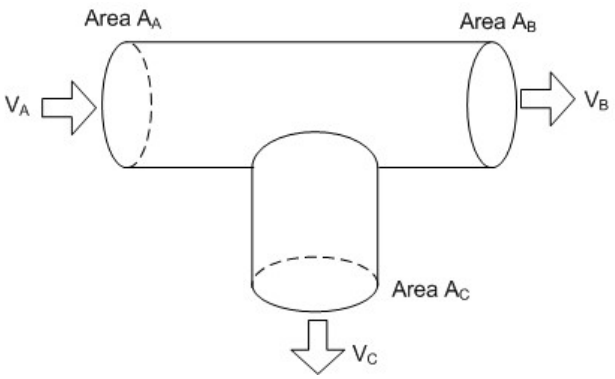

Velocity Ratio V_B/V_A	C_o
0.4	0.12
0.5	0.09
0.6	0.06
0.7	0.03
0.8 – 1.0	0.0

Table 4.8 c Typical dynamic loss coefficient for straight through Tee fittings

Example 4.6

Estimate the difference in pressure losses for a short-radius bend (R/D=0.25) and a long-radius bend (R/D=2.5), where the air flow rate is 1 m^3/s and the duct diameter is 400 mm. Take the density of air to be 1.2 kg/m^3.

Solution

From equation (4.11), dynamic pressure loss across the bend, $\Delta P_d = C_o . P_v$

Dynamic loss coefficient, C_o = 0.45 (R/D=0.25) and 0.22 (R/D=2.5)

Duct velocity v = 1 / (π x 0.2^2) = 8 m/s

Velocity pressure $P_v = (\frac{1}{2}\rho v^2) = 0.5 \times 1.2 \times 8^2 = 38.4$ Pa

Dynamic pressure loss across short-radius elbow = 0.45 x 38.4 = 17.3 Pa
Dynamic pressure loss across long-radius elbow = 0.22 x 38.4 = 8.4 Pa

Reduction in pressure losses = (17.3 – 8.4) Pa = 8.9 Pa

Example 4.7

Consider a ventilation system which mainly comprises of an axial fan and a 200 m long duct, operates 24 hours a day and is designed to transport 1000 l/s of air. If the fan has a rated efficiency of 70% at the operating point and the duct size is selected based on Table 4.7 (400 mm diameter), compute the annual fan motor energy consumption. Assume motor efficiency to be 88% and the duct pressure loss to be 1.75 Pa/m.

Estimate the increase in annual energy consumption that would result if a 315 mm round duct is used instead. Assume the duct pressure losses for the 315 mm round duct with 1000 l/s to be 5.5 Pa/m.

Solution

Total duct losses for 400 mm diameter duct = 200 m x 1.75 Pa/m = 350 Pa

$$\text{Input electrical power (kW)} = \frac{\text{Flow rate } (m^3/s) \text{ x Pressure (Pa)}}{1000 \text{ x Overall system efficiency}}$$

= [1 x 350] / [1000 x 0.7 x 0.88]
= 0.568 kW

Annual energy consumption = 0.568 (kW) x 24 hrs x 365 days = 4,976 kWh

If a 315 mm diameter duct is used,

Total duct losses for 315 mm diameter duct = 200 m x 5.5 Pa/m = 1100 Pa

Fan power (W) = [1 x 1100] / [1000 x 0.7 x 0.88]
= 1.786 kW

Annual energy consumption = 1.786 (kW) x 24 hrs x 365 days = 15,645 kWh

Increase in fan motor energy use = (15,645 – 4,976) = 10,669 kWh / year

4.9 Fan discharge and inlet system effects

Fan inlet and outlet conditions also affect system losses, which can result in higher fan power to satisfy the requirements.

Fans impart dynamic pressure on the air due to centrifugal action. This dynamic pressure has to be converted to static pressure to enable the fan to overcome the system losses. Usually, a minimum duct length is required after the fan to enable this static regain to be completed. Therefore, a system design should attempt to use straight ductwork for 3 to 5 equivalent duct diameters downstream of the fan discharge (Figure 4.24).

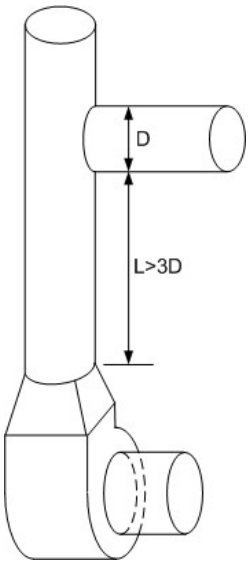

Figure 4.24 Minimum straight length at fan discharge

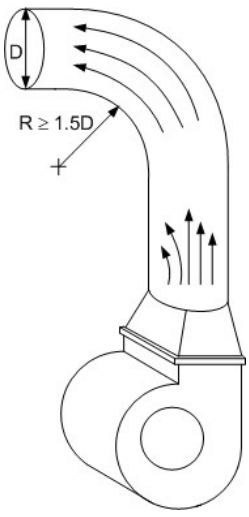

Figure 4.25 Minimum radius of bends at fan discharge

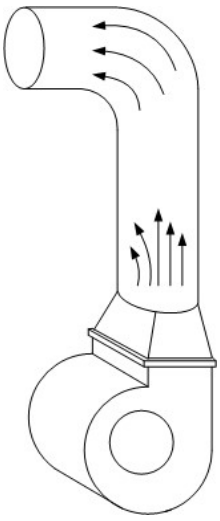

Figure 4.26 Orientation of fan and duct bend to minimise losses

When an elbow must be used at the fan discharge, it is recommended not to have a short-radius elbow. Preferably, an elbow with a minimum radius of 1.5 times the equivalent duct diameter should be used (Figure 4.25).

Where possible, the orientation of the fan and duct fittings should be arranged to minimise disturbance to air flow. For example, the bend after the fan can be in the same direction as the air flow profile, as shown in Figure 4.26.

Where transition to a duct with a larger area is required after the fan, a taper having an included angle of no more than 15° should be used.

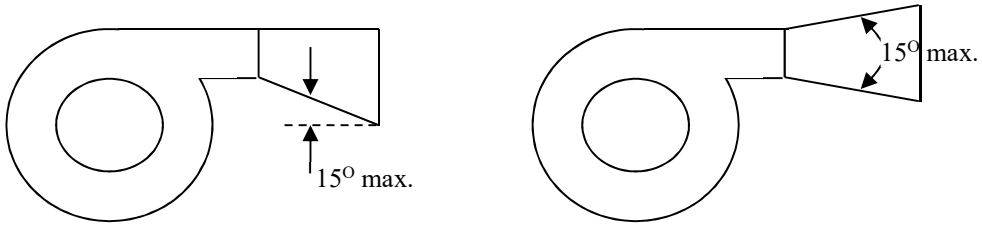

Figure 4.27 Fan discharge transitions

Where fans discharge into a plenum, losses occur due to the sudden enlargement in flow area. The addition of a short discharge duct of only 1 or 2 equivalent diameters in length significantly reduces this sudden enlargement loss.

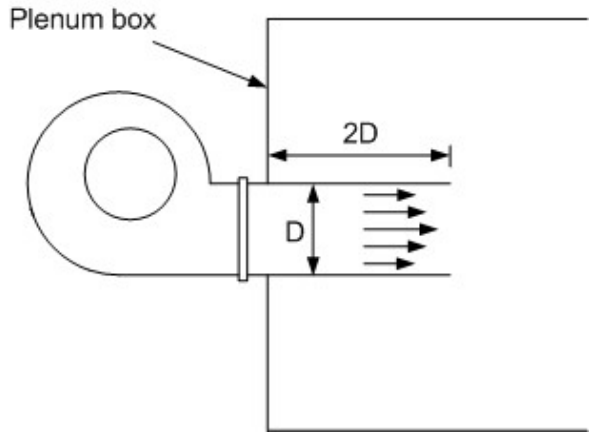

Figure 4.28 Fan discharging into a plenum box

Similarly, fan inlet conditions also affect fan performance. Turbulence at the inlet of a fan (Figure 4.29) reduces the efficiency with which the fan imparts kinetic energy to the air stream. Such non-uniform flow into the suction of a fan is typically caused by an elbow installed too close to the fan inlet. Such an arrangement will not allow the air to enter the impeller uniformly and will cause turbulent and uneven flow distribution

at the fan impeller resulting in lower fan efficiency and higher fan power. Ideally, the minimum straight duct length before the fan should be equivalent to three times the duct diameter. If it is not possible to have a sufficient straight length of ducting at the fan suction, vanes can be installed to minimise losses as shown in Figure 4.30.

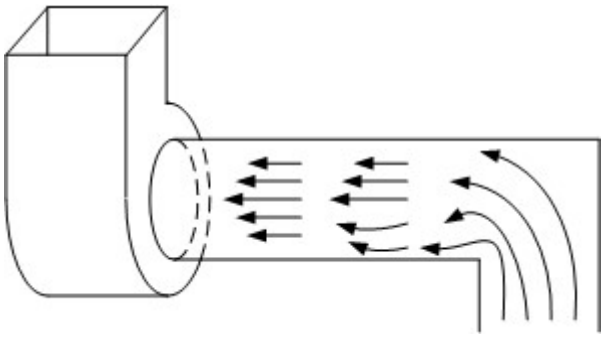

Figure 4.29 Minimum straight duct at fan suction

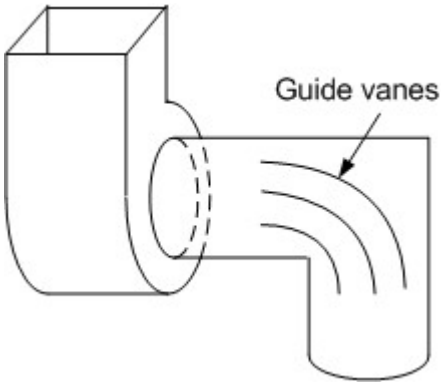

Figure 4.30 Use of vanes to straighten airflow

In some applications, the opening is not vertically centred to the fan inlet. By adding a simple splitter sheet on each side of the fan as shown in Figure 4.31, the performance of the fan can be improved.

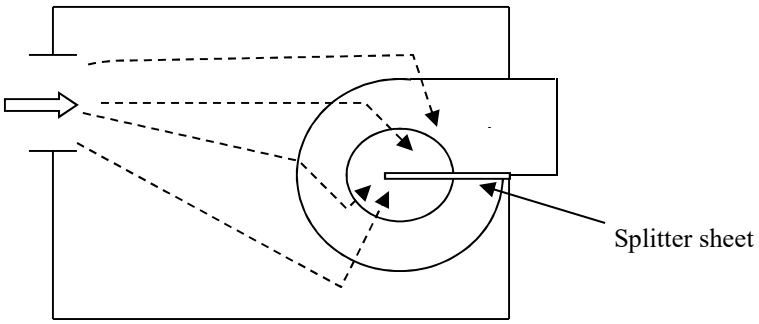

Figure 4.31 Splitter sheet for unbalanced flow

4.10 Filter losses

Various types of air filters are used in air distribution systems to filter the air before being supplied to the different users. These air filters remove suspended solid or liquid materials from the fresh air and the recirculation air.

The most common type of filters used for air handling equipment are media filters. These filters are normally made of fibrous material trap particles when air passes through them. Media filters offer a resistance to the air flow, depending on the type of filter and the amount of air flowing through them. When these filters accumulate dust, the pressure drop across them increases. Usually, filters are selected to work up to a design pressure drop after which they need to be cleaned or replaced. As shown in the Figure 4.32, the pressure drop across the filter is lower than the design when it is clean, which results in higher air flow (Q_3). Gradually, when the pressure drop increases, the air flow drops to the design value (Q_2). If the filters are not cleaned or replaced at this stage, the higher pressure drop results in lower air flow (Q_1).

From an energy efficiency point of view, there are two aspects that need to be considered in such filter operations. Firstly, when the filter is clean, more air flow than required is provided by the system. From equation (4.1) we know that higher the air flow, the higher the energy consumption. This means that during the period from when the filter is clean to when it reaches the design pressure drop, if the air flow can be reduced, the energy consumed by the fan can be reduced. The easiest way to achieve this is by using a VSD to modulate the fan speed to provide the design air flow. Since the air flow delivered by the fan is proportional to the fan speed, the fan can be operated at speeds lower than the design speed and gradually increased to the design value. Since the fan power is proportional to the cube of the fan speed, significant energy savings can be achieved by this measure as illustrated in Figure 4.33.

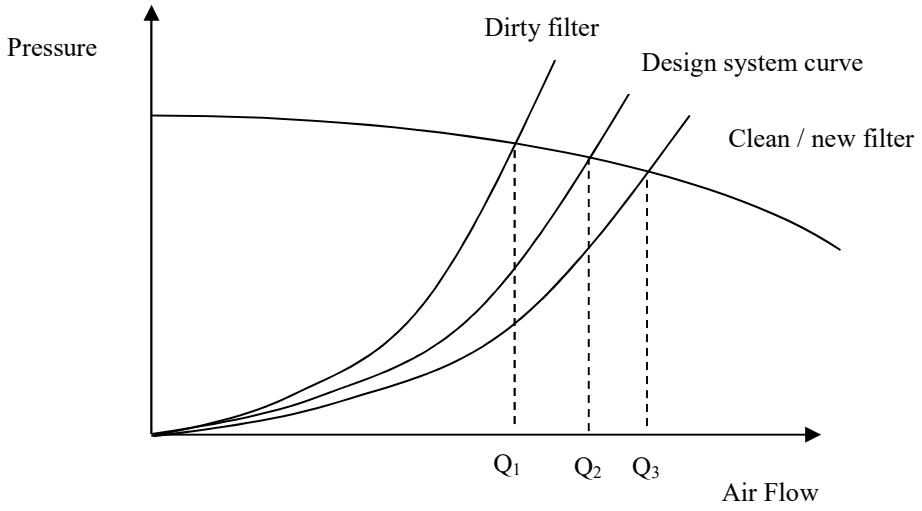

Figure 4.32 Effect of filters on system performance

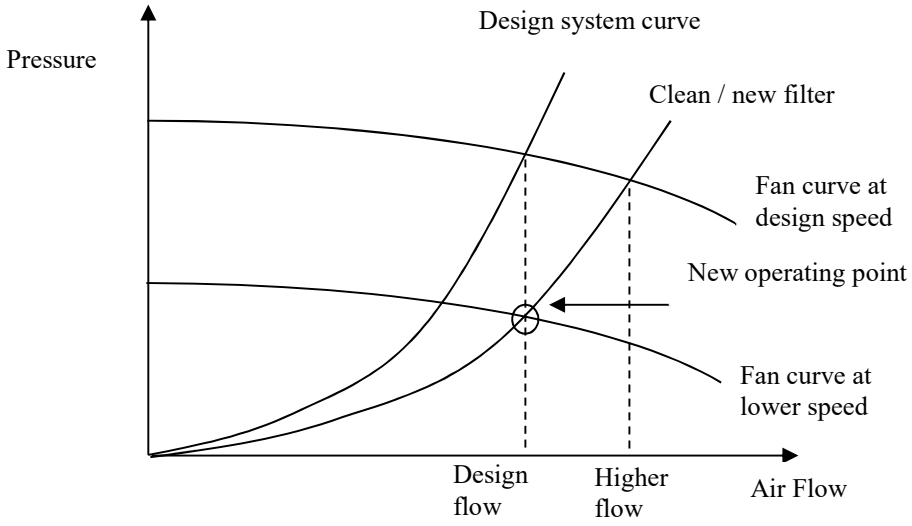

Figure 4.33 Effect of reducing fan speed with a clean filter

Secondly, energy savings can be achieved by replacing or cleaning the filter when it reaches its design pressure drop. A sensor can be installed to provide an alarm when the filter needs cleaning or replacing. If nothing is done to the filters at this stage, the air flow will drop and become insufficient. In extreme cases, this problem of insufficient air flow is solved by running the fan at a higher speed by changing the pulleys or setting a higher set-point on the VSD, if such a device is used. Both these solutions lead to higher fan power consumption.

When filters are not cleaned or replaced regularly, apart from resulting in higher pressure drop, dirt particles sometimes pass through the filters and get lodged in the

cooling coils. This results in a higher pressure drop across the coils, which leads to higher fan power and the need for more frequent cleaning of the coils, which is even more expensive than cleaning or replacing filters.

Another type of filter being used in air handling units are electronic air filters, which use “electrostatic precipitation” to effectively remove particles as small as 0.01 microns. Electronic air cleaners circulate air contaminated with particles through a series of ionizing wires and plates that generate positive ions, and a section of collection plates that precipitate the ionized particles out of the air. Electrons, which are randomly present in the air, accelerate rapidly towards the positively charged ionizing wires. On the way to the wires, these accelerating electrons strike electrons out of other air molecules, making them positive ions. The positive ions become attached to the pollutant particles and are collected in the collector section which has a series of thin metal plates that are alternatively charged positively and negatively with a high DC voltage.

Unlike media filters, which have pressure drops of 25 to 50 Pa (sometimes even much higher), these electronic air cleaners offer little resistance to the air flow. Since, fan pressure is proportional to the square of the fan speed and fan power is proportional to the cube of fan speed (fan affinity laws), significant savings in fan power can be achieved by using electronic air cleaners.

Example 4.8

A fan delivers 15 m^3/s of air in a system which has a filter with a pressure drop of 200 Pa. Calculate the savings in fan shaft power that can be achieved if this filter is replaced with another which has a pressure drop of only 50 Pa. Assume the total efficiency of the fan to be 65%.

Solution

From equation (4.2),

$$\text{Fan impeller power (kW)} = \frac{\text{Flow rate } (m^3/s) \text{ x Pressure developed } (N/m^2 \text{ or Pa})}{1000 \text{ x Efficiency}}$$

Therefore, saving in fan power = [15 m^3/s x (200 – 50) Pa] / [1000 x 0.65]

= 3.5 kW

Face velocity

In addition to selecting filters with lower pressure drop, fan power consumption can also be reduced by lowering the velocity of air passing through a filter. Since the pressure drop across a filter is proportional to the square of the air flow velocity (face velocity), a 10% increase in filter face area can reduce the pressure losses by about 20% (reduction in pressure losses due to reduced face velocity is explained further in section 4.11 below).

4.11 Coil losses

Condition of coils

Similar to filters, heating and cooling coils installed in air distribution systems also offer significant resistance. The pressure drop across coils depends on their design (density of rows and fins), face velocity and how well the coils have been maintained (how clean they are).

Coils are placed downstream of filters so that any particles in the air can be filtered before the air reaches the coil. However, if the filters used are not efficient or not well maintained, they cannot remove dirt particles. This results in the coil acting as the filter. Cooling coils that have been in use for about 10 years and have not been cleaned regularly have a significant drop in air flow due to blockage of the coils. One way of checking the condition of the coil is by comparing the actual coil pressure drop with the coil design pressured drop.

Face velocity

Apart from keeping the coils clean, fan power consumption can also be minimised through coil design and selection. The pressure drop across coils depends on the number of coil rows and fin density as well as the face velocity of air flowing through them.

The face velocity of a coil is the velocity of air passing through the coil. The pressure drop across a coil is proportional to the square of the velocity. Therefore, as shown in Figure 4.34, if the face velocity can be reduced by 10%, the pressure drop can be reduced by about 20%. Reduction in coil face velocity can be achieved by making the coil bigger. However, this leads to a higher first cost for the coil due to its larger size. Usually, to reduce first cost, coils are designed for face velocities of about 2.5 m/s. Although coils with low face velocities of about 1 m/s cost more at first, they have a much lower operating cost due to much lower fan energy consumption. Therefore, if

coils are selected based on life-cycle cost, low face velocity coils offer significant energy savings.

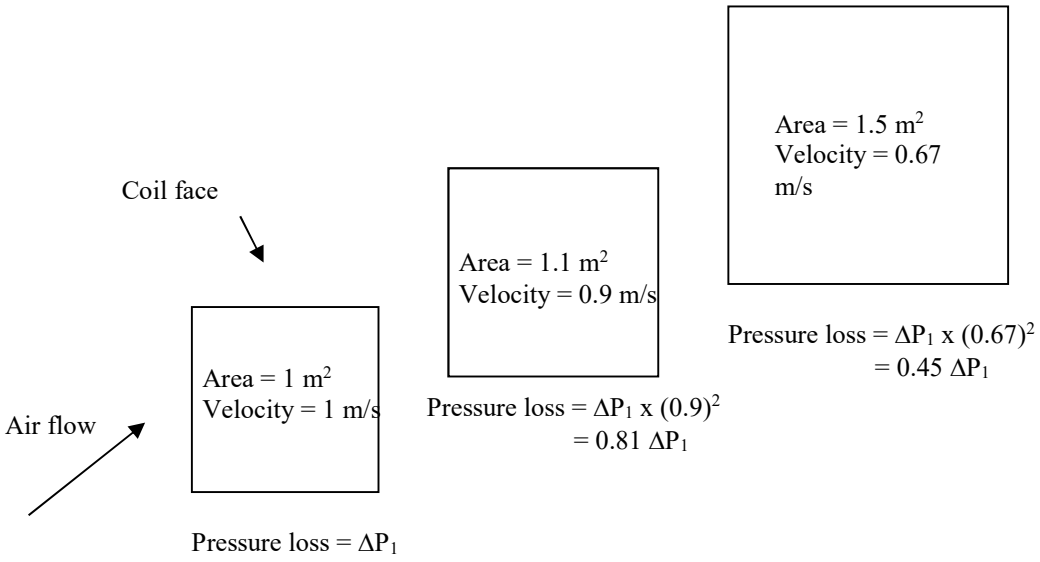

Figure 4.34 Coil face area and pressure losses

Example 4.9

In a system that delivers 15 m^3/s of air, the pressure drop across a cooling coil is 200 Pa and the face velocity is 2.5 m/s. Calculate the pressure drop and the reduction in fan power that will result if the face velocity is reduced to 1.5 m/s. Assume the fan efficiency is 65%.

Solution

Q = 15 m^3/s

v_1 = 2.5 m/s

v_2 = 1.5 m/s

$\Delta p_{1\,(coil)}$ = 200 Pa

$\Delta p_{2\,(coil)} = \Delta p_{1\,(coil)} \times (v_2 / v_1)^2 = 200 \times (1.5 / 2.5)^2 = 72$ Pa

Reduction in pressure drop across the coil = (200 – 72) = 128 Pa

From equation (5.2), reduction in fan power = [15 (m^3/s) x 128 (Pa)] / [1000 x 0.65] = 2.95 kW.

4.12 Right sizing of fans

Fan selection for a particular application depends on the expected air flow rate and system pressure losses. The design air flow rate is normally computed based on expected load conditions. Since the air flow delivered by a fan also depends on the pressure losses in the system which it has to overcome to deliver the required air flow

rate, the system pressure losses also need to be estimated prior to selecting a fan. As described in section 4.8, system losses depend on factors such as friction losses in ducting, losses due to fittings, and changes in velocity and direction. In system design, usually a safety factor is added to account for differences between computed values and actual system losses that may result due to reasons such as changes in ducting layout during installation to overcome site constraints. The safety factor used for designing an air distribution system usually depends on how comfortable or confident the designer is with the design. It is not uncommon to see systems designed with high safety factors which results in excess air flow during actual operation due to the intersection of the fan curve and actual system curve at a point different from the design operating point (Figure 4.35).

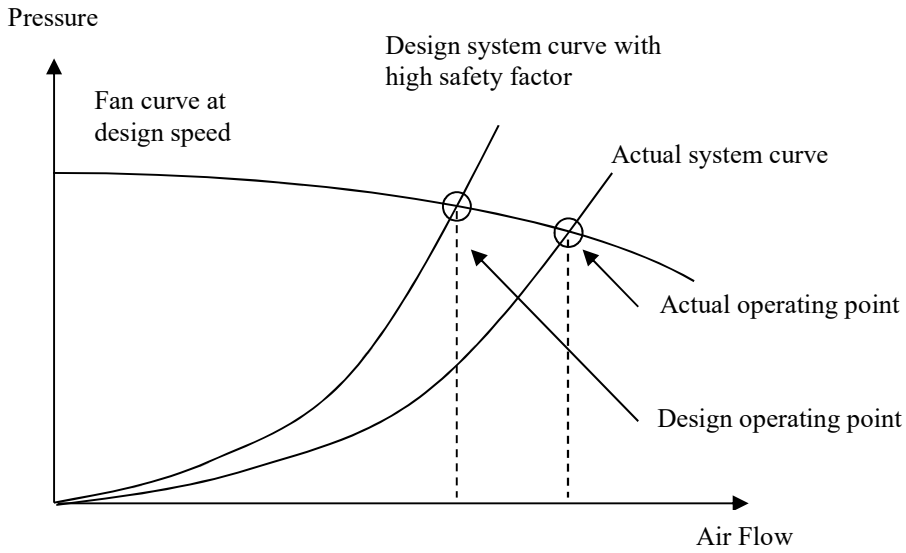

Figure 4.35 Fan performance due to use of high safety factor for estimating system losses

As explained earlier, fan power depends on both the air flow delivered and the system pressure losses [equation (4.1)]. Therefore, excess air flow results in higher fan power consumption.

If the air flow is found to be excessive, the simplest solution is to reduce the fan speed since air flow is proportional to the fan speed (Table 4.6). This can be easily achieved by changing the pulley sizes of the fan and the motor (if it is a belt driven fan).

Since reduction in fan speed is proportional to the required reduction in air flow, if the air flow needs to be reduced by 20%, then the fan speed also needs to be reduced

by 20%. The pulley sizing to achieve this reduction in fan speed is illustrated in example 4.10.

Example 4.10

A system is found to be delivering 9 m^3/s of air when the actual requirement is 7.5 m^3/s. The fan speed is measured to be 750 rpm while the motor speed is 960 rpm. The motor pulley size is 200 mm. Find the fan speed and pulley size required to reduce the air flow rate to 7.5 m^3/s.

Solution

$Q_1 = 9\ m^3/s$

$Q_2 = 7.5\ m^3/s$

$N_1 = 750$ rpm

New fan speed, $N_2 = N_1 \times (Q_2 / Q_1) = 750 \times (7.5 / 9) = 625$ rpm

Since the fan and motor speeds and pulley diameters are related as follows,

$$N_{(fan)} / N_{(motor)} = D_{(motor)} / D_{(fan)}$$

New fan pulley diameter, $D_{(fan)} = (D_{(motor)} \times (N_{(motor)}) / N_{(fan)}$

Therefore, $D_{(fan)} = 200 \times (960 / 625) = 307.2$ mm

Another common way of reducing the fan speed is by using a VSD for the fan motor and then running the motor at a lower speed. Although this solution is normally more expensive than a pulley change, it is easier to achieve the desired air flow through trial-and-error setting of VSD frequency.

4.13 Modulating airflow rate

From equation (4.1), fan power consumption can be reduced by lowering the airflow rate. In many fan systems, the load is variable and peak load conditions are usually experienced only for short periods of time. Therefore, the capacity of fans can be controlled to match load requirements by varying the amount of air supplied. A few such applications are described next.

Variable air volume (VAV) systems

In constant air volume (CAV), the capacity is controlled by varying the supply air temperature. In such systems, the fan is operated at a fixed speed to give a fixed quantity of air. This not only wastes energy by supplying a constant volume of air irrespective of the load, but also leads to high space relative humidity in air-conditioning systems at low loads due to higher operating supply air temperatures at part-load.

To avoid these shortcomings, variable air volume systems with devices such as discharge dampers, inlet guide vanes or VSDs can be used to regulate the air volume with load while maintaining a fixed supply air temperature. Although discharge dampers and inlet guide vanes are able to reduce the air volume, the energy savings achieved are much less than using VSDs, which are able to closely follow the theoretical “cubic” fan power relationship. Typical energy savings achieved by varying the air flow in VAV systems using the different systems are illustrated in the Figure 4.36.

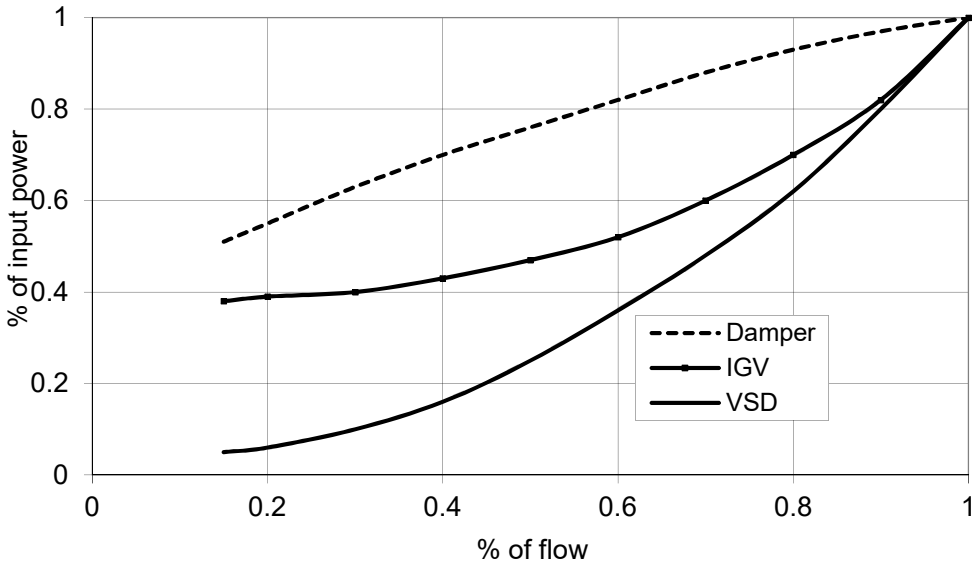

Figure 4.36 Fan energy consumption in different VAV systems

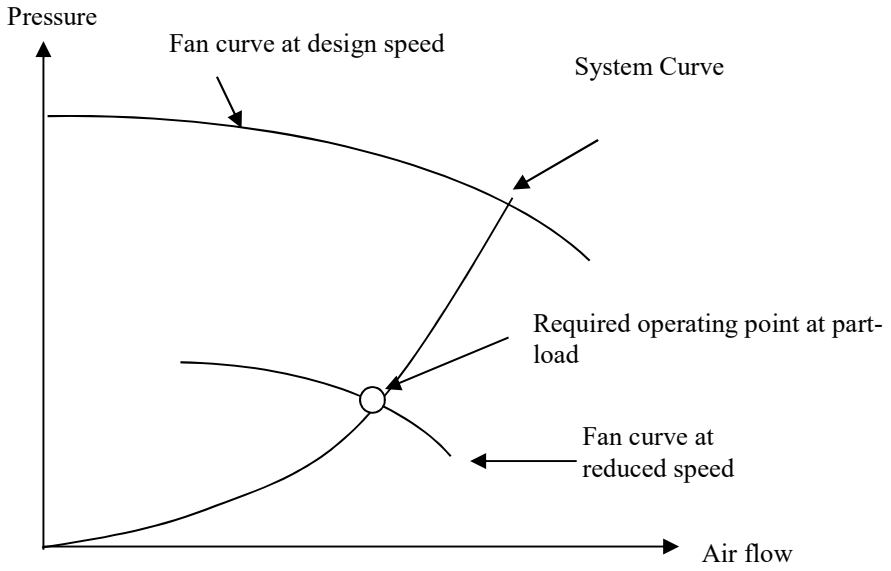

Figure 4.37 Reducing air flow at part load by reducing fan speed

Ventilation control

Mechanical ventilation systems consisting of supply and exhaust fans are widely used for ventilating building spaces such as basement car parks. These ventilation systems are normally designed to provide the ventilation rates required under extreme or worst case conditions. However, ventilation rates required under normal operating conditions are usually much less and it is possible to control the operation of the fans to match the actual ventilation requirements.

For car parks, carbon monoxide (CO) and temperature sensors can be used to monitor the quality of car park air and control the supply and exhaust fans. The values for temperature and CO level can be set based on individual requirements or ventilation codes. Since the operation of exhaust and supply fans normally need to be interlocked to ensure a pressure balance in the areas served by them, the control system would need to control both sets of fans simultaneously.

In car park ventilation systems that have many supply and exhaust fans serving specific areas of the car park, sensors installed in various parts of the car park can be used to switch on / off the sets of supply and exhaust fans serving specific areas when the CO level and temperature in a particular part of the car park reache a set value.

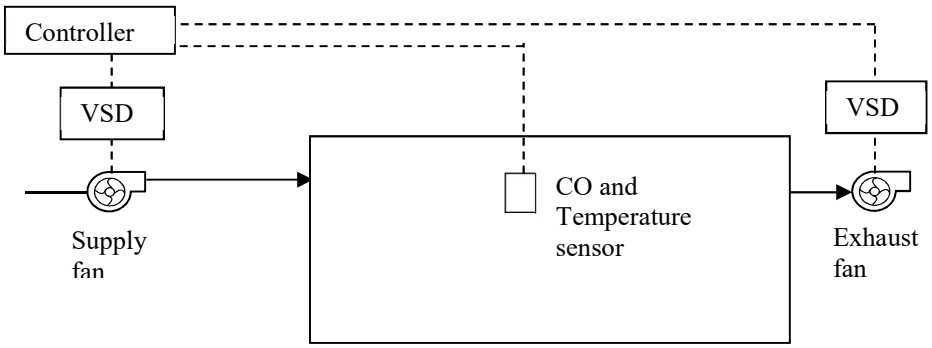

Figure 4.38 Ventilation control based on CO level

Cooling tower fan capacity control

Capacity of cooling towers is dependent on the air flow through them. Therefore, when the amount of heat to be rejected at the cooling towers is low it is not necessary to run the cooling towers at full capacity. The cooling tower capacity can be reduced by reducing the air flow which would result in lower fan energy consumption.

One way of achieving this is by cooling tower fan cycling where some fans are switched on or off to control condenser water temperature. This, however, can result in a swing in condenser water temperature and can cause premature wear and tear of the motor drives.

A better way is to use VSDs to control cooling tower fan speed. As shown in Figure 4.39, the speed of the cooling tower fans in operation can be modulated to maintain a set temperature. The easiest control strategy is to maintain the condenser water supply temperature at the design value. Therefore, for a system designed to provide condenser water at 29.4^{o}C, the control system can be used to provide condenser water at this set value by modulating the cooling tower fan speed.

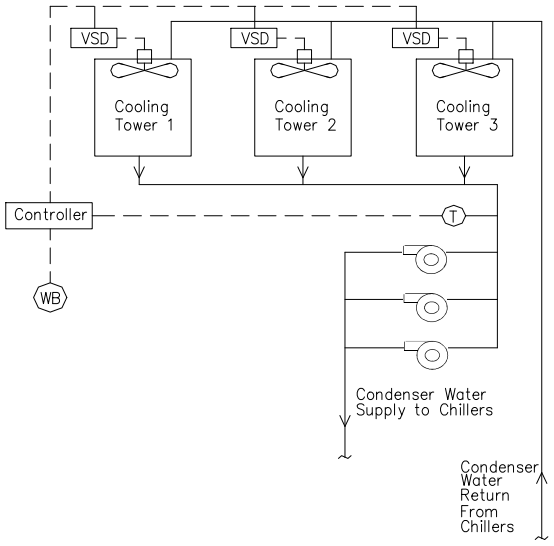

Figure 4.39 Cooling towers with variable speed fans

Since theoretically the power consumed by fans is proportional to the cube of the fan speed, when the cooling load drops to 80%, the speed of cooling tower fans can also be reduced accordingly, resulting in a drop of about 50% (0.8^3 = 0.51) in power consumption. Therefore, this control strategy can lead to very significant savings from cooling tower fans at part-load. Use of VSDs to control cooling tower capacity, rather than fan staging, also leads to reduction in wear and tear of the drives due to lower fan speed and less drift losses (water losses) due to lower air velocity.

4.14 Special high efficiency fan designs

The typical efficiency of axial flow fans is about 60%. The main reason for this relatively low efficiency is because, metallic blades which are commonly used for cooling tower fans are manufactured by extrusion or casting processes where it is not possible to produce ideal aerodynamic blade profiles.

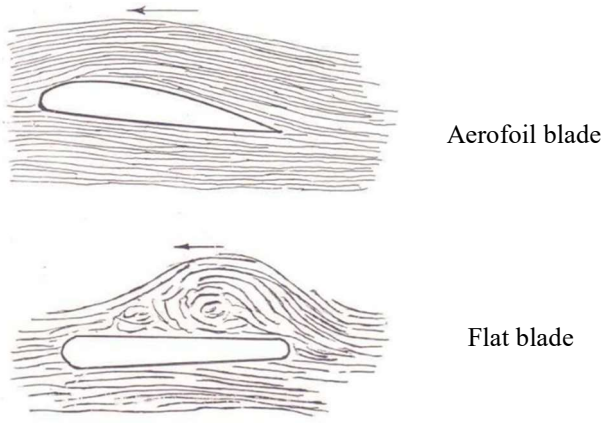

Figure 4.40 Profiles of flat and aerofoil blades (courtesy of Impact Group India)

When a fan blade rotates, it creates a “lift” effect which generates the air flow. However, when generating lift, a drag force is also created in the opposite direction. When the blade angle is changed to increase lift, the drag also increases. The relationship between lift and drag is shown in Figure 4.41.

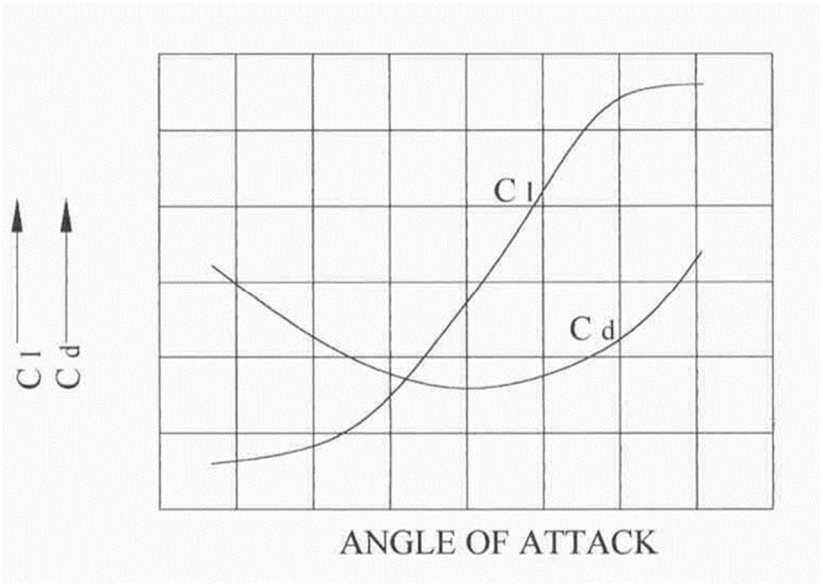

Figure 4.41 Relationship between lift and drag (courtesy of Impact Group India)

The lift generated by a fan also is dependent on the blade speed. In large diameter axial fans, the speed of different locations of the fan leading edge that makes contact with air is considerably different, increasing from the root of the blade at the hub to the highest value at the tip. Therefore, to achieve a uniform lift from the entire length of the fan blade, the angle of attack at the root of the blade needs to be high while a much lower angle is required at the tip. This requires a “twisted” blade profile from the root to the tip of the blade which is not easy to achieve with metallic blades.

However, fan blades can also be made from fibre reinforced plastic (FRP) which are normally hand moulded and therefore easier to produce with optimum aerodynamic profiles. Such FRP fan blades are designed to have twisted and tapered blade profiles and can achieve an efficiency of about 80%.

A FRP fan blade with an aerodynamic profile is shown in Figure 4.42. Data from a cooling tower fan retrofit project which involved replacing the conventional metallic fan blades with FRP blades resulting in fan power savings of 20 to 30% is described next.

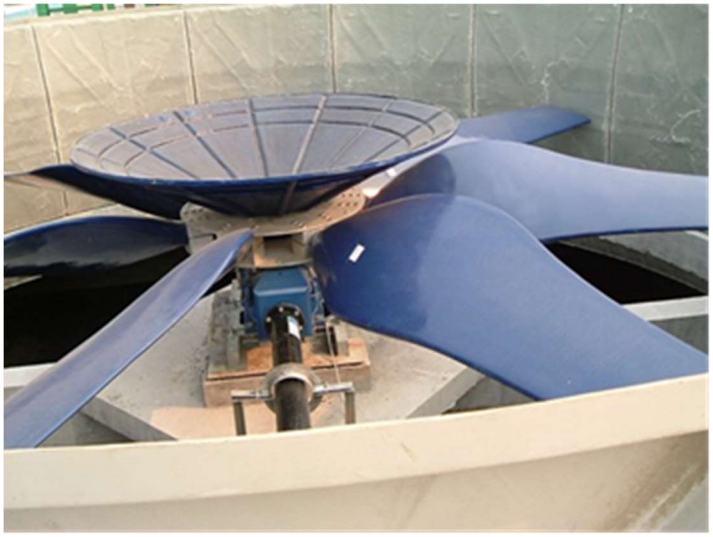

Figure 4.42 Fan with aerofoil blades (courtesy of Impact Group India)

4.15 Case studies on fan system improvement projects

Case study 1 – Hotel room FCU EC fan upgrade

Case study data and images courtesy of ebm-papst

Description

Traditional hotel room fan coil units (FCU) use single, double or triple, forward curved impellers driven by a single induction motor connected to a three-speed step controller The arrangement of a conventional induction motor driven FCU fan is shown in Figure 4.43. In addition to having a low energy efficiency, such FCU fans generate noise which affects guest comfort.



Figure 4.43 Conventional induction motor FCU fan

Solution

These conventional FCU fans can be replaced with impellers mounted on EC motors (shown in Figure 4.44). EC motor fans have better energy efficiency and lower noise levels when compared to conventional fans.



Figure 4.44 Example of single impeller unit using EC motor technology

Usually, the EC motor fans can be installed with only slight adjustment to the mounting bracket and face-plate as shown in Figure 4.45.



Figure 4.45 Conventional FCU fan and motor replaced with an integrated EC motor

After replacing the fan, a converter box is installed between hotel room controller and EC fan system to convert the old three-speed step controller to work with the 0-10 VDC control input of the EC fan. A typical converter box is shown in Figure 4.46.



Figure 4.46 Converter box for FCU fan conversion

Energy savings and noise reduction achieved

Tables 4.9 and 4.10 show the power savings and reduction in noise levels achieved by upgrading a conventional induction motor-based fan system to an EC fan system. As can be seen from the table, the highest energy savings (more than 50%) are achieved at low speed fan operation.

Parameters	Traditional Dual Fan	EC Dual-Fan
Airflow Low [m/s]	2.29	2.20
Airflow Medium [m/s]	2.75	2.50
Airflow High [m/s]	3.18	3.00
Power consumption - Low airflow [W]	100	48
Power consumption – Medium airflow [W]	104	72
Power consumption - High airflow [W]	114	96
Power savings	-	16 to 52%

Table 4.9 Pre and post retrofit measurements of airflow and power

Sound pressure	Traditional Dual Fan	EC Dual-Fan Option
On the Bed – Low airflow [dB(A)]	37.1	37.0
On the Bed - Medium airflow [dB(A)]	41.0	38.0
On the Bed - High airflow [dB(A)]	44.0	42.0

Table 4.10 Pre and post retrofit sound measurements on the middle of the bed

Case study 2 – Heat recovery wheel AHU fan replacement

Case study data and images courtesy of ebm-papst

Description

This AHU contained an integrated heat recovery wheel together with supply and return fans as shown in Figure 4.47.

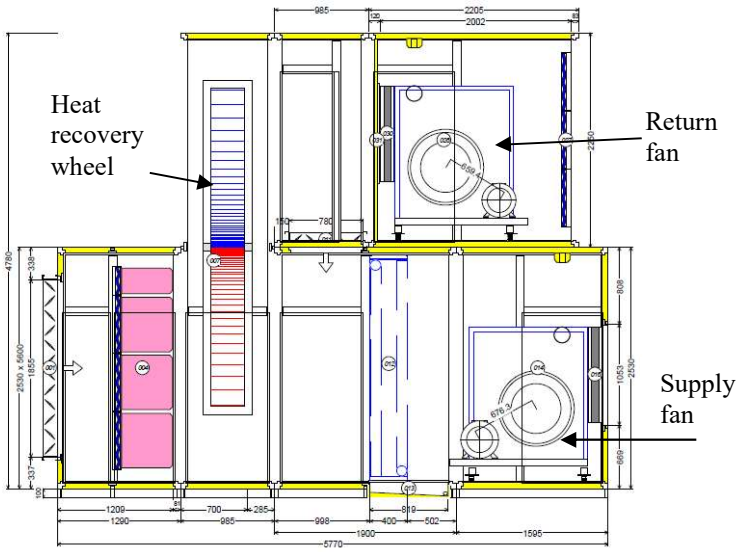

Figure 4.47 Arrangement of the AHU with heat recovery wheel

Blowing on heat recovery components with high velocities can result in an uneven airflow pattern which results in less than optimum operation of the heat recovery wheel. The air flow pattern for such a fan operation is shown in Figure 4.48.

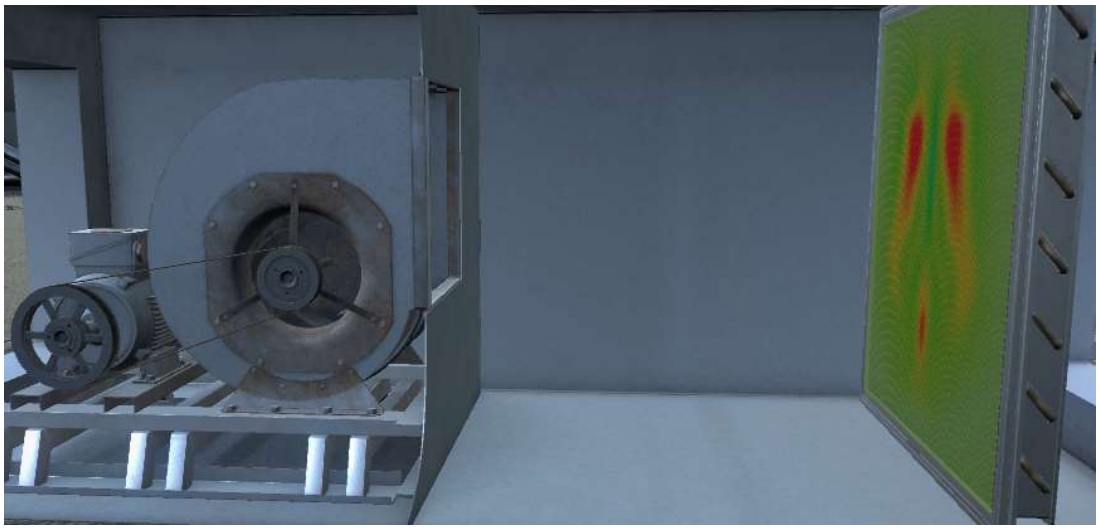

Figure 4.48 Velocity profile over a coil from a “blow-over” arrangement

In addition to a drop in performance, such an uneven velocity profile resulted in unbalanced operation of the wheel and caused the bearing hub of the recovery wheel to fail regularly.

Solution

The forward curved AHU fans were replaced with a fan grid consisting of 8 fans per side (return and supply) as shown in Figure 4.49. The new fans installed were with airfoiled blades which have a much higher static efficiency and are driven by energy efficient EC motors.

An added advantage of this design is that it provides redundancy because in the event of the failure of one fan, the speed of the remaining fans can be increased to provide the required total air flow.



Figure 4.49 New fan grid with 8 EC fans operating in parallel

Energy Savings achieved

Electrical input power of original fan system (wire-to-air*) – 2 fans = 60 kW

Electrical input power of fan grid system (wire-to-air) – 16 fans = 38 kW

Power savings achieved = 22 kW

(* term “wire-to-air” is explained in section 10.5)

Case study 3 – Use of fans with aerofoil blades

This case study is for a cooling tower fan replacement project at a manufacturing plant in Singapore where twelve cooling towers are used to meet the heat rejection requirements of the central chilled water plant.

The retrofit project commenced by measuring the air flow rate for each fan and the fan dimensions (diameter). As the cooling tower fans are directly mounted on the gear box shaft (Figure 4.50), the shaft details were also measured so that the hub of the new replacement fans could be fabricated.

All twelve cooling tower fans were replaced with new fans with aerofoil blades and the pre- and post-retrofit data are summarised below.

Original fan with flat metallic blade

Fan diameter = 10 feet

Air flow = 300,000 CMH

Number of blades = 9
Motor power = 26 kW

New fan with flat metallic blade
Fan diameter = 10 feet
Air flow = 300,000 CMH
Number of blades = 6
Motor power = 19 kW

The savings in power achieved was 7 kW per fan and the total savings for twelve fans was 84 kW. This retrofit project resulted in fan power savings of 27%.



Original fan



New fan

Figure 4.50 Images of original and new fans

Summary

This chapter provided an introduction to the commonly used types of fans together with their key performance characteristics. Thereafter, important design criteria for minimisation of system pressure losses together with various energy saving and optimisation measures for fan systems were presented.

References

1. Air Movement and Control Association International. ANSI/AMCA 203-90, Field Performance Measurement of Fan Systems, 1990.
2. Air Movement and Control Association International. ANSI/AMCA 205-12, Energy Efficiency Classification for Fans, 2012.
3. AMCA International. Introducing the Fan Energy Index. An AMCA International White Paper January 2017.
4. ANSI/ASHRAE/IES 90.1-2013, Energy Standard for Buildings Except Low-Rise Residential Buildings, 2013.

5. ANSI/ASHRAE/IES Standard 189.1. Laboratory Methods of Testing Fans for Aerodynamic Performance Rating. Arlington Hts., IL: AMCA International, 2010.
6. ASHRAE, Handbook of Fundamentals, American Society of Heating, Refrigerating and Air-conditioning Engineers, Inc., Atlanta, GA, 2009.
7. Improving Fan System Performance: A source book for industry, US Department of Energy Industrial Technologies Program, 2003.
8. Innovative fan technology, Suddeutscher Verlag onpact Gmbh in collaboration with ebm-papst, 2014,
9. International Code Council. International Green Construction Code (IgCC), 2012.
10. International Standards Organization. ISO Standard 12759. Fans – Energy efficiency classification for fans. Geneva, Switzerland, 2010.
11. Ivanovich, Michael, Wolf, Mike, Catania, Tom, New Efficiency Metric for Fans Enables New Approaches for Efficiency Regulations and Incentives, 2017.
12. Jayamaha, Lal, Energy-Efficient Building Systems, Green Strategies for Operations and Maintenance, McGraw-Hill, New York, 2006.
13. Jayamaha, Lal, Energy-Efficient Industrial Systems, Evaluation and Implementation, McGraw-Hill, New York, 2016.
14. Technology – Basic principles publication, ebm-papst Mulfingen Gmbh & Co. KG, 2017.

5.0 PUMPING SYSTEMS

A pump is a device used for raising the pressure of an incompressible fluid and for transporting liquids from one location to another. Pumps operate by converting mechanical energy to hydraulic energy.

Pumps are widely used in buildings and industrial plants and account for a significant portion of their energy consumption. In buildings, pumps are mainly used to provide water for heat transfer in air-conditioning and heating systems. In industrial plants, pumps are used in cooling and hydraulic systems as well as for transferring liquids in various process systems. Pumps are also used by utility companies to provide fresh water, and to remove and treat wastewater.

This chapter provides an overview of the different types of pumps and describes how to select a pump for a particular application. Various energy saving measures that can be incorporated to optimise the design of pumping systems are also described in detail.

Learning Outcomes:

The main learning outcomes from this chapter are to understand:

1. Types of pumps and important pump characteristics
2. Pump selection
3. Optimising design of pumping systems
4. Optimising operation of pumping systems

5.1 Types of pumps

The two main types of pumps are centrifugal and positive displacement (Figure 5.1). Centrifugal pumps are the most common type of pumps used. They have an impeller mounted on a shaft which is driven by a motor and rotates in a volute or diffuser casing. The rotating impeller imparts kinetic energy to the fluid which is later converted to a static head in the volute casing.

Centrifugal pumps are the most commonly used type of pump in industry because they have good performance characteristics and are relatively cheaper.

Centrifugal pumps can be further classified as axial flow, radial flow and mixed flow pumps. In axial flow pumps, the impeller pushes the liquid in a direction parallel to the

pump shaft and the liquid discharges along the axis of the shaft. Axial flow pumps are sometimes called propeller pumps because they operate like the propeller of a boat.

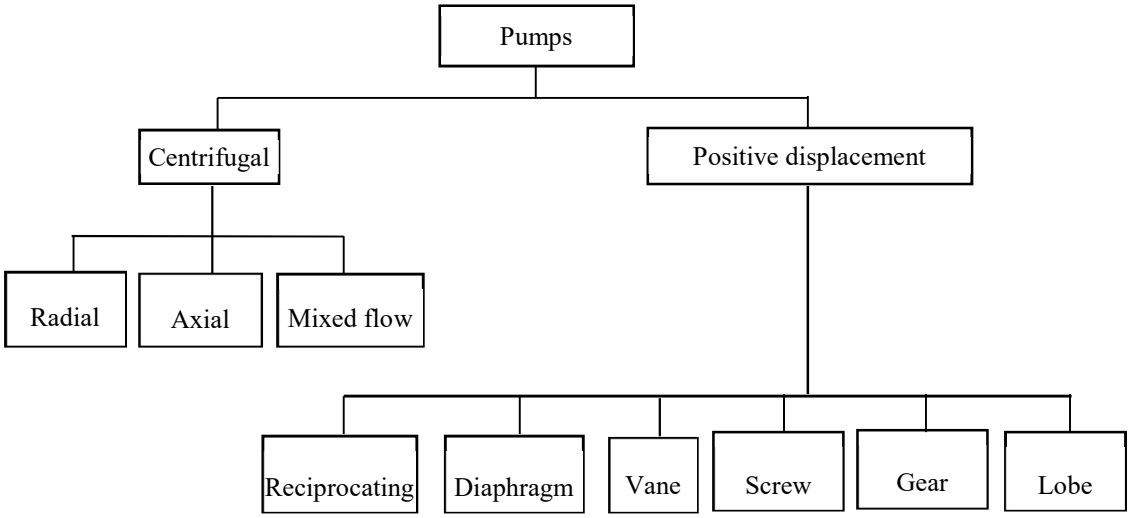

Figure 5.1 Classification of pumps

In radial flow pumps, the impeller discharges liquid radially at 90° to the shaft axis. As the name suggests, mixed flow impellers discharge liquid in a conical direction using a combined radial and axial pumping action. The impeller blades push liquid out away from the pump shaft and to the pump suction at an angle greater than 90°.

Axial flow pumps are used for large flow and low head applications while radial flow pumps are used for low flow, but high head applications. Mixed flow pumps are used for intermediate flow and head applications, as shown in Figure 5.2.

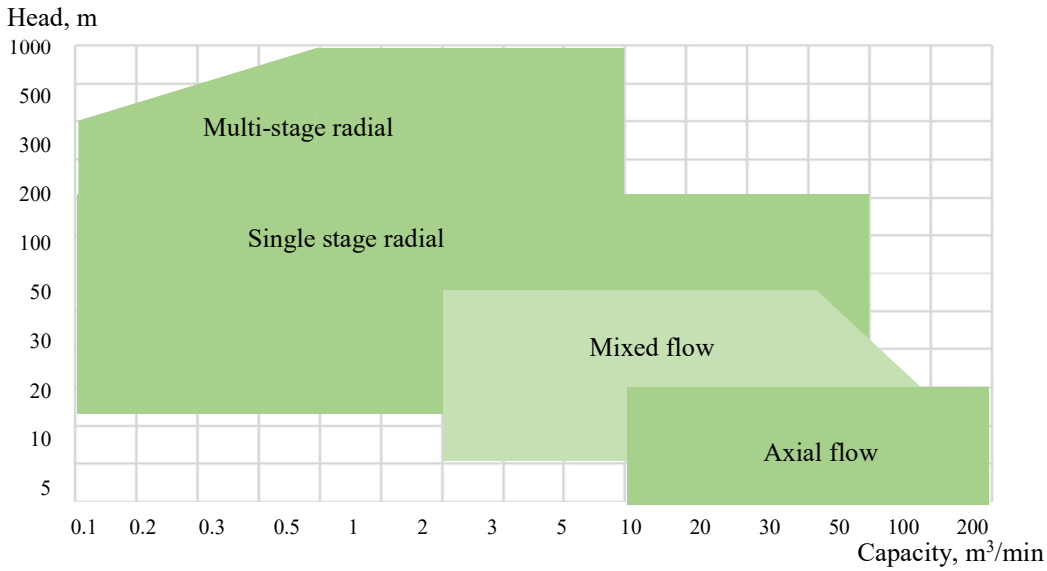

Figure 5.2 Application range for different types of centrifugal pumps

Centrifugal pumps are also classified by the installation arrangement and mechanical features. The most common pumps used are end-suction type pumps which are horizontally mounted with single-suction impellers, horizontally or vertically-split case pumps with double-suction impellers and vertically mounted in-line pumps (Figures 5.3 and 5.4).



Figure 5.3 End-suction and in-line pumps (courtesy of ITT Industries)



Figure 5.4 Horizontally and vertically split case pumps (courtesy of ITT Industries)

Positive displacement pumps operate by displacing a fluid from a fixed volume due to the action of a piston stroke or shaft rotation. Liquid flows into the pump as the cavity on the suction side expands and the liquid flows out of the discharge as the cavity collapses. Types of positive displacement pumps include piston & cylinder, screw, gear, lobe and sliding vane. The capacity of positive displacement pumps is dependent on the operating speed and is independent of the suction and discharge pressures.

Positive displacement pumps are commonly used for special applications such as for highly viscous fluids, high pressure very low flow applications and where a constant flow is required irrespective of pressure variations in the system.

5.2 System and Pump Curves

Pumping systems are either closed, where a fluid is circulated in a closed loop, or open, where static pressure is present due to a height difference such as with cooling towers or open vessels. Arrangements of closed and open systems are shown in Figure 5.5.

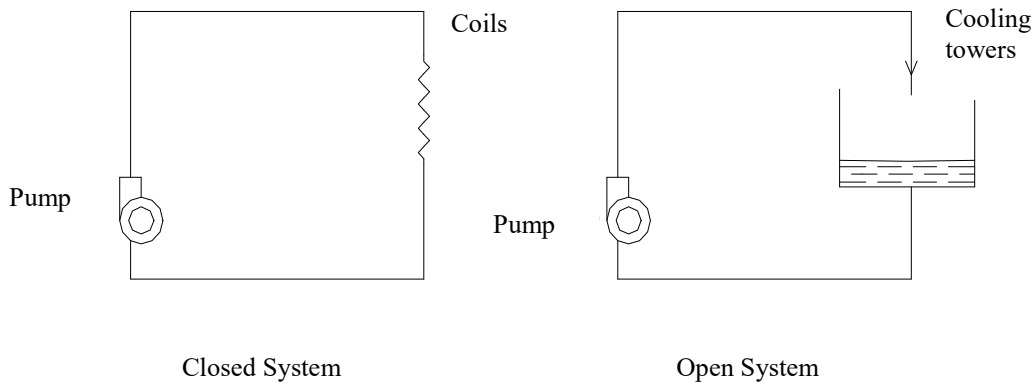

Figure 5.5 Arrangement of closed and open systems

Pumps and pumping systems are normally rated based on the pressure head and flow rate. These two parameters are dependent on each other.

The pressure developed by a pump is necessary to overcome resistances in the system such as those due to frictional losses in piping, pressure losses across valves, coils and heat exchangers; and static head differences in open systems. The relationship between head losses in a system and the system flow rate is called the system resistance curve. Typical system curves for open and closed systems are shown in Figure 5.6.

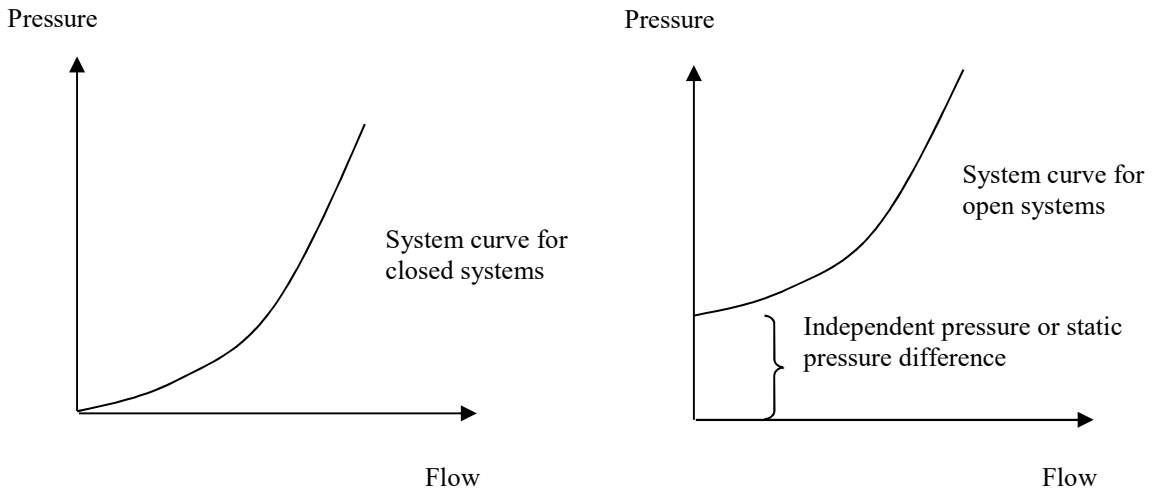

Figure 5.6 System curves (closed & open systems)

The difference between the two curves is that for open systems the static pressure difference or independent pressure due to height difference is added to the system curve. The system curve is parabolic in shape since the pressure losses in the system are proportional to the square of the flow ($\Delta P \propto Flow^2$) as will be explained later in section 5.6.

Each particular system has its own resistance curve due to its own unique pipe sizing, pipe lengths and fittings. The system resistance curve therefore can change if components in the system are changed.

Example 5.1

A closed chilled water pumping system consists of one big pump and one small pump. When the big pump is in operation, the pressure differential across the pump is 3 bar and the chilled water flow rate is measured to be 200 l/s. Estimate the chilled water flow rate for the same system when the small pump is in operation and the pressure differential across the pump is 2 bar.

Solution

System flow rate is proportional to the square of the system pressure ($\Delta P \propto Flow^2$)

Pressure across big pump, ΔP_1 = 3 bar

Pressure across small pump, ΔP_2 = 2 bar

System flow rate with big pump, Q_1 = 200 l/s

System flow rate with small pump, Q_2 = Q_1 x $\sqrt{(\Delta P_2 / \Delta P_1)}$

= 200 x $\sqrt{(2/3)}$

= 163.3 l/s (see Figure 5.7)

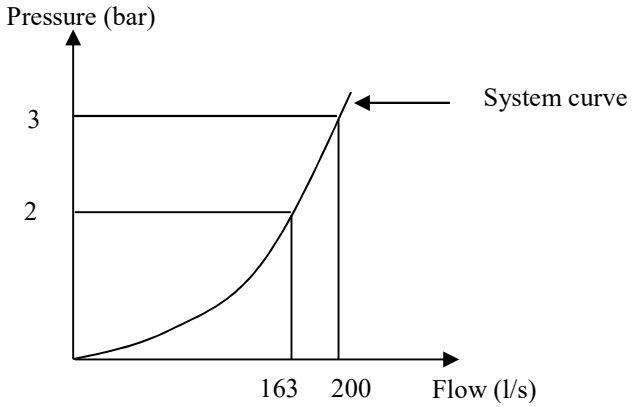

Figure 5.7 Figure for example 5.1

Similarly, the relationship between the flow rate and pressure developed by a pump is called a pump curve. The pump curve shows all the different operating points of a pump at a particular operating speed as its discharge is throttled from zero to full flow. Since pumps can operate at different speeds and with different impeller sizes, pump curves are usually plotted on the same axis. Figure 5.8 shows the pump curves for a particular pump using different impeller sizes.

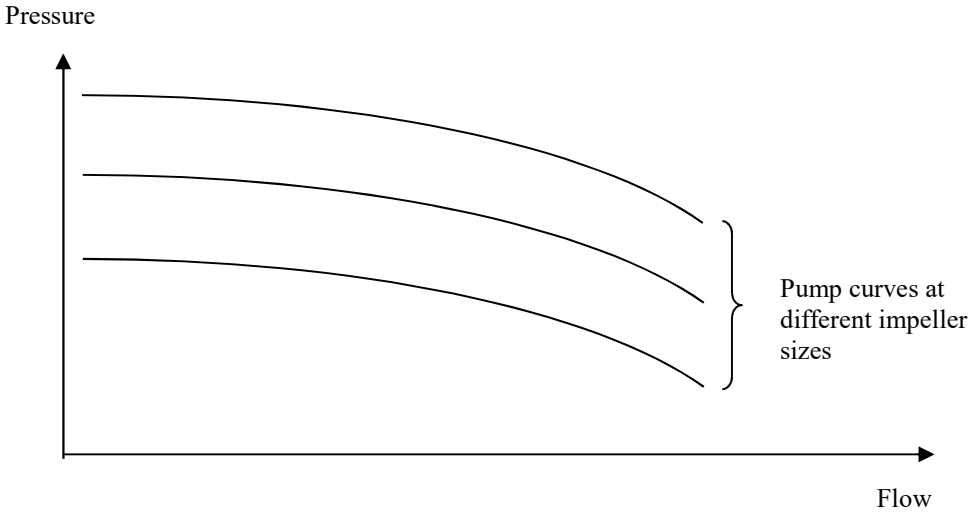

Figure 5.8 Pump curves for different impeller diameters

Such pump curves provided by pump manufacturers usually show not only the relationship between flow rate and pressure, but also the pump power and operating efficiency. The pump curves can be flat or steep as shown in Figure 5.9. In pumps with flat curves, large variations in flow can be achieved with relatively less change in pressure.

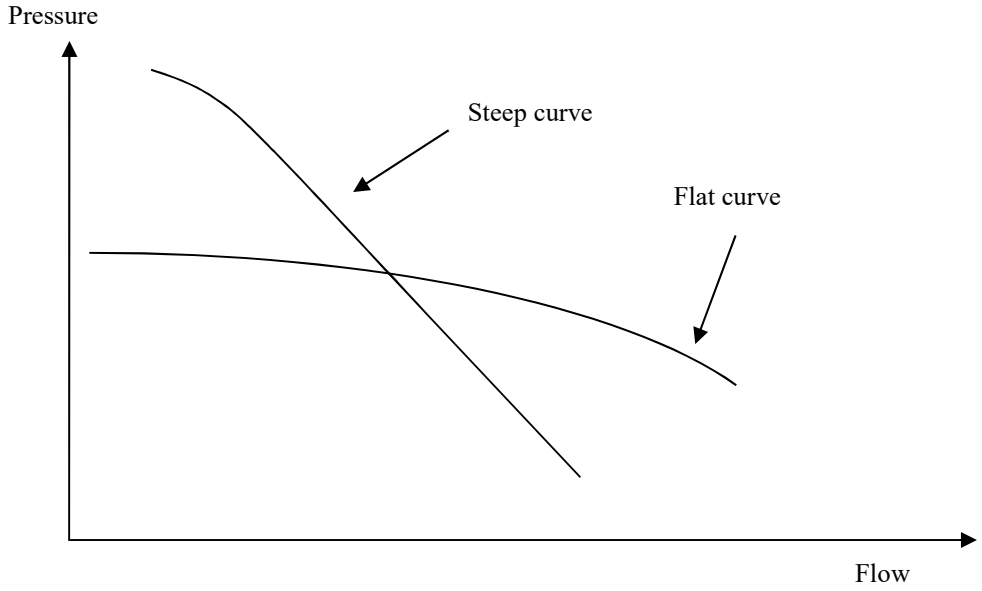

Figure 5.9 Flat & steep pump characteristics

When a pump is selected for a particular application, a pump which has a performance curve that can intersect the system curve at the desired operating point is selected as shown in Figure 5.10.

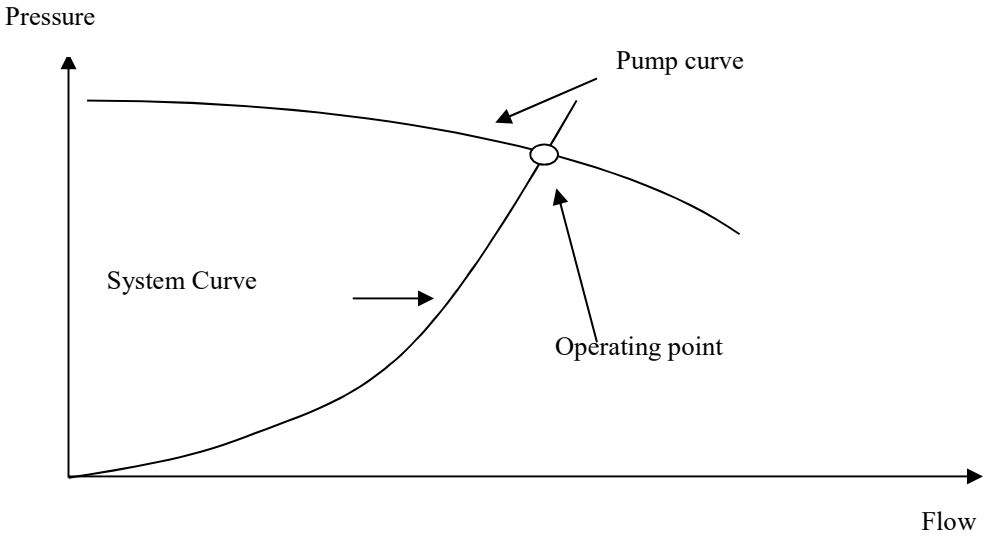

Figure 5.10 System and Pump curve for a pumping system

5.3 Pump net positive suction head (NPSH)

If the liquid at the suction of a pump vapourisers, it can lead to cavitation and can damage the pump impeller. The liquid will vaporise only if the pressure at the inlet of the pump drops below the vapour pressure of the liquid. This is not a problem in many pumping systems as they are closed systems or the suction port of the pump is connected to a reservoir that is at a level higher than the pump. However, in systems where the pump intake is from a reservoir below the pump, the design of pumping systems and pump selection have to ensure that there is a minimum positive pressure available at the pump suction to prevent cavitation called net positive suction head(NPSH).

NPSH can be defined as:

1) NPSH Available ($NPSH_A$) which is the absolute pressure at the inlet of the pump, and
2) NPSH Required ($NPSH_R$) which is the minimum pressure required at the inlet of the pump to prevent the pump from cavitating.

$NPSH_A$ is dependent on the system design and can be calculated, while $NPSH_R$ is a property of the pump and is provided by the pump manufacturer. To prevent cavitation, $NPSH_A$ has to be greater than the $NPSH_R$ for the pump.

$NPSH_A$ can be calculated using the following equation:

$$NPSH_A = \frac{P_s - P_v}{\rho \cdot g} \pm H_Z - H_F \qquad (5.1)$$

where,

P_s = pressure at the surface of the tank, Pa

P_v = vapour pressure of the liquid at the operating temperature, Pa

ρ = density of liquid, kg/m^3

g = acceleration due to gravity, m/s^2

H_Z = vertical height difference between the surface of the liquid in the reservoir and the centreline of the pump, m

H_F = friction loss in the piping from the intake to the pump, m

Example 5.2

The suction side of a pumping system is shown in Figure 5.11. The tank is open to the atmosphere and friction loss in the piping is estimated to be 1 m of water. Compute

the $NPSH_A$. The saturation vapour pressure and density of the liquid are 5.6 kPa and 950 kg/m^3 respectively. Take the atmospheric pressure to be 101 kPa.

Solution

Using equation (5.1),

$$NPSH_A = \frac{P_s - P_v}{\rho . g} \pm H_Z - H_F$$

$$= \left(\frac{101-5.6}{950 \text{ x } 9.81}\right) \text{x} 1000 - 5 - 1$$

$$= 4.2 \text{ m}$$

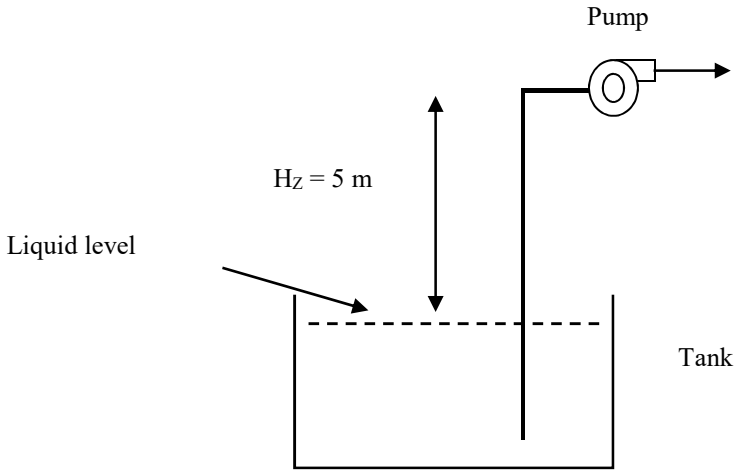

Figure 5.11 Diagram for example 5.2

5.4 Pump power

The power consumed by a pump is proportional to the product of the flow rate and the pressure difference (between discharge and suction), given by

$$\text{Pump power} \propto \frac{\text{Liquid flow rate x Pressure difference}}{\text{Efficiency}} \quad (5.2)$$

In SI units:

$$\text{Pump impeller power (kW)} = \frac{\text{Flow rate (m}^3\text{/s) x Pressure difference (N/m}^2\text{)}}{1000 \text{ x Efficiency}} \quad (5.3)$$

In Imperial units:

$$\text{Pump brake horsepower} = \frac{\text{Flow rate (USgpm) x Pressure difference (ft. water)}}{3960 \text{ x Efficiency}} \quad (5.4)$$

Therefore, based on relationships shown in equations (5.2) to (5.4), pump power consumption can be lowered by reducing the liquid flow rate and the pressure head and increasing the pump efficiency. These are the main strategies employed to reduce energy consumption of pumps and pumping systems.

5.5 Affinity laws

The performance levels of centrifugal pumps under different conditions are related by the pump affinity laws given in Table 5.1. The pump affinity laws relate pump speed and impeller diameter to flow rate, pressure developed across the pump and brake horsepower of the pump.

	Change in speed (N)	**Change in impeller diameter (D)**
Flow (Q)	$Q_2 = Q_1\left(\frac{N_2}{N_1}\right)$	$Q_2 = Q_1\left(\frac{D_2}{D_1}\right)$
Pressure (Δp)	$\Delta p_2 = \Delta p_1\left(\frac{N_2}{N_1}\right)^2$	$\Delta p_2 = \Delta p_1\left(\frac{D_2}{D_1}\right)^2$
Power (P)	$P_2 = P_1\left(\frac{N_2}{N_1}\right)^3$	$P_2 = P_1\left(\frac{D_2}{D_1}\right)^3$

Table 5.1 Pump affinity laws

Example 5.3

A pump delivers 100 l/s of water and operates at 1400 rpm. The pump shaft power is 50 kW. If the pump speed is reduced to 1300 rpm using a VSD, estimate the new pump flow rate and shaft power. Assume the pump efficiency remains the same.

Solution

Q_1 = 100 l/s

P_1 = 50 kW

N_1 = 1400 rpm

N_2 = 1300 rpm

$Q_2 = Q_1 \times (N_2 / N_1) = 100 \times (1300 / 1400) = 92.9$ l/s

$P_2 = P_1 \times (N_2 / N_1)^3 = 50 \times (1300 / 1400)^3 = 40$ kW

Limitations when using affinity laws

Affinity laws are widely used to estimate energy savings that can be achieved from pumping systems when flow rate or system pressure is reduced. However, as in the case of fans, there are three important factors that should be considered when using the affinity laws to estimate energy savings.

Firstly, application of affinity laws assume that the efficiency of the pump, motor and drive remain constant. Although this is a reasonable assumption to make when the pump speed variation is not very great, if the pump speed is reduced significantly, the drop in the efficiency of the motor and pump can be significant.

The second point to note is that motor cooling is reduced when the motor cooling fan mounted on the motor drive shaft operates at a lower speed. Unlike in fan applications, there is no air flow to assist in motor cooling. In many applications, the pump motor speed can be reduced to about 40% of the rated speed, without motor overheating.

The third point to note is that the affinity laws are applicable only in variable torque applications where pressure reduction is proportional to square of the flow rate ($\Delta P \propto Q^2$). Therefore, the affinity laws will not be applicable when the flow rate or pressure is changed independently. This would be the case for example, in an RO (reverse osmosis) system. The flow is reduced but the pressure across the filtration membrane has to be maintained to ensure system operation.

5.6 Pressure losses in pipes and fittings

When a liquid flows through a piping system, head or pressure losses take place due to fluid friction in the piping and resistance offered to the flow by the various devices such as valves, strainers and bends installed in the piping system.

The friction losses depend on the pipe material, length of the piping, fluid velocity and properties of the fluid. Therefore, for a given fluid such as water, the friction losses can be reduced by minimising pipe length and reducing flow velocity (increasing pipe diameter).

On the other hand, for a particular flow velocity, losses due to various fittings and devices installed on piping systems depend on the design of the device or fitting.

Therefore, for a given flow velocity, different types of valves can have different losses associated with them.

Pressure drop due to friction of a fluid flowing in a pipe is given by the Darcy-Weisbach equation:

$$\Delta h = f \frac{L}{D} \frac{V^2}{2g} \qquad (5.5)$$

where

Δh = friction loss, m

f = friction factor, dimensionless

L = length of pipe, m

D = inside diameter of pipe, m

V = average velocity of fluid, m/s

g = acceleration due to gravity, 9.8 m/s^2

This results in the relationship (pressure $\propto$ Flow^2).

To simplify design of piping systems, friction losses per unit length for various pipe sizes and materials are generally expressed in the form of charts and tables and are available in design reference guides such as the ASHRAE Fundamentals.

In good piping designs, the size of pipes is usually selected to maintain friction losses to be equal or less than 150 Pa/m. Table 5.2 provides a list of sizes for schedule 40 steel pipes selected to maintain the friction losses to within 150 Pa/m for water pumping applications.

Further, pressure losses in fittings are also proportional to square of the flow velocity and can be expressed as:

$$\Delta h = K \frac{V^2}{2g} \qquad (5.6)$$

where

K = dynamic loss coefficient depending on type of fitting, size and flow velocity.

Water flow rate (l/s)	Recommended pipe diameter for schedule 40 steel pipes (mm)
5	50 or 65
10	100
20	125 or 150
40	200
60	200 or 250
80	250
100	250
200	350
300	400
400	450
600	500

Table 5.2 Size of steel pipes for various water flow rates

The value of K is measured experimentally and is available in design reference guides. Example values of dynamic loss coefficients are listed in Tables 5.3 a, b and c (data provided are only for illustrative purposes).

Nominal pipe diameter (mm)	90^0 regular elbow	90^0 long radius elbow	45^0 long radius elbow
25	0.43	0.41	0.22
40	0.4	0.35	0.21
50	0.38	0.3	0.2
100	0.31	0.22	0.18
150	0.29	0.18	0.17
200	0.27	0.16	0.17
250	0.25	0.14	0.16
300	0.24	0.13	0.16

Table 5.3 a Typical dynamic loss coefficient for bends

Regular and long radius elbows refer to bend radius of 1 and 1.5 times the pipe diameter respectively.

As indicated in Table 5.3a, the loss coefficient for a 45° elbow is about half that of a 90° regular elbow. As most piping networks have numerous bends, using 45° bends can significantly reduce the pump head and therefore, the power required by the pump. Figure 5.12 shows some images of long radius bends used in pumping systems.



Figure 5.12 Use of long radius bends to reduce pressure losses

Nominal pipe diameter (mm)	Inline Tee	Branch Tee
25	0.26	1.0
40	0.23	0.9
50	0.2	0.84
100	0.15	0.7
150	0.12	0.62
200	0.1	0.58
250	0.09	0.53
300	0.08	0.5

Table 5.3 b Typical dynamic loss coefficient for pipe Tees

Nominal pipe diameter (mm)	Globe valve	Gate valve	Check valve
25	13	-	2
40	10	-	2
50	9	0.34	2
100	6.5	0.16	2
150	6	0.1	2
200	5.7	0.08	2
250	5.7	0.06	2
300	5.7	0.05	2

Table 5.3 c Typical dynamic loss coefficient for selected valves (fully open)

As shown in Table 5.3 c, globe type valves have significant dynamic losses even if they are fully open. Therefore, globe type valves should be avoided and gate or butterfly valves (almost zero loss when fully open) should be used for isolation purposes. If globe valves are used for balancing flows between different devices, the piping design should be changed where possible to eliminate such requirement. For example, by avoiding common piping headers as will be explained later in this chapter.

Example 5.4

A 250 mm diameter piping system used for pumping 100 l/s of water has 10 nos. 90° regular elbows. If the pump has a rated efficiency of 75% at the operating point, compute the reduction in annual pump motor energy consumption that would result if 45° long radius elbows are used instead of the regular elbows. Assume motor efficiency to be 88% and the pump operating hours to be 24 hours a day.

Solution

Flow area = π x (pipe diameter)^2 / 4

= 3.14 x $(0.25)^2$ / 4

= 0.049 m^2

Flow velocity, v = volume flow rate / flow area

= 0.1 m^3/s / 0.049 m^2

= 2 m/s

Using equation (5.6),

Losses across regular 90° elbows = number of bends x K value for bends x v^2 / (2 x g)

= 10 x 0.25 (table 5.3a) x 2^2 / (2 x 9.81)

= 0.509 m (of water)

Losses across long radius 45° elbows = number of bends x K value for bends x v^2 / (2 x g)

= 10 x 0.16 (table 5.3a) x 2^2 / (2 x 9.81)

= 0.326 m (of water)

Using equation (5.3),

Reduction in pump power = $\frac{0.1 \times (0.509 - 0.326) \times 9.81 \times 1000 \ (N/m^2/m)}{1000 \times 0.75 \times 0.88}$

= 0.27 kW

Reduction in annual energy consumption = 0.27 (kW) x 24 hrs x 365 days = 2,365 kWh

Example 5.5

In the pumping system shown in Figure 5.13, a pump circulates 100 l/s of water through two heat exchangers. Based on the following system information, estimate the total head for the pump in metres of water.

Total pipe length = 50 m
Pipe pressure loss = 150 Pa/m
Diameter of pipes and fittings = 250 mm
Number of pipe bends = 15 (90^0 regular elbows)
Number of gate valves = 6
Pressure loss across heat exchanger 1 = 5 m of water
Pressure loss across heat exchanger 2 = 3.5 m of water

Solution

Total pressure losses in piping = pipe length x loss per unit length

= 50 m x 150 Pa/m

= 7500 Pa

= 0.76 m (of water)

Total pressure losses across heat exchangers = 5 m + 3.5 m
= 8.5 m (of water)

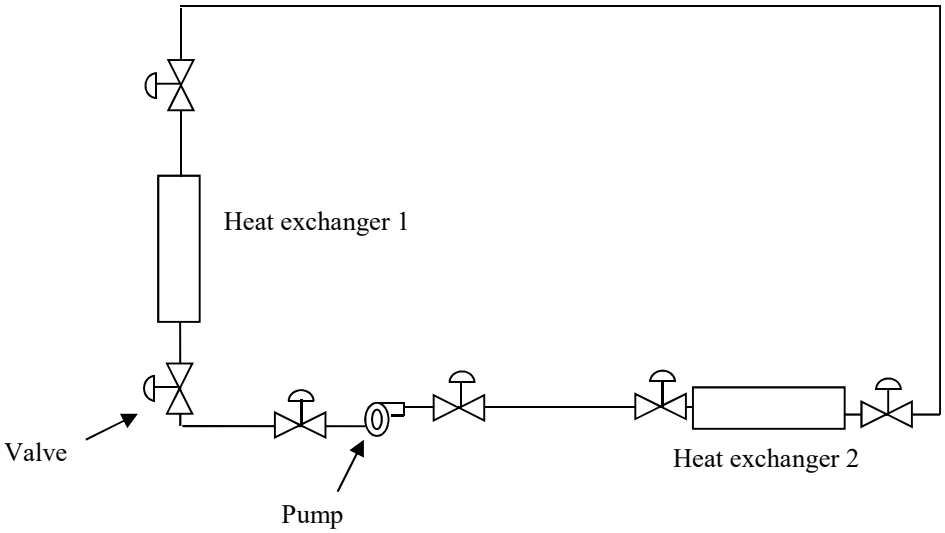

Figure 5.13 Diagram for Example 5.5

Water flow rate = 100 l/s = 0.1 m^3/s

Flow area = π x (pipe diameter)^2 / 4
= 3.14 x $(0.25)^2$ / 4
= 0.049 m^2

Flow velocity, v = volume flow rate / flow area
= 0.1 m^3/s / 0.049 m^2
= 2 m/s

Using equation (5.6),

Losses across valves = number of valves x K value for valves x v^2 / (2 x g)
= 6 x 0.06 (table 5.3c) x 2^2 / (2 x 9.81)
= 0.07 m (of water)

Losses across bends = number of bends x K value for bends x v^2 / (2 x g)
= 15 x 0.25 (table 5.3a) x 2^2 / (2 x 9.81)
= 0.76 m (of water)

Total head for pump = pipe losses + heat exchanger losses + valve losses + bend losses

= (0.76 + 8.5 + 0.07 + 0.76) m

= 10.09 m (of water)

5.7 Parallel and series pumping

Multiple pumps are used in many pumping applications. Pumps installed in parallel are the most common type of arrangement where two or more pumps of the same or different capacity operate in parallel, as shown in Figure 5.14.

One of the main advantages of parallel pumping systems is the flexibility it offers to operate multiple pumps to best match varying load requirements. In such a pumping system, multiple pumps can be switched on or off depending on the load so that the operating pumps can operate more efficiently.

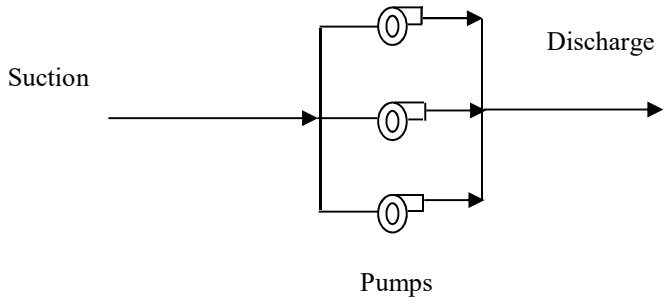

Figure 5.14 Arrangement of pumps operating in parallel

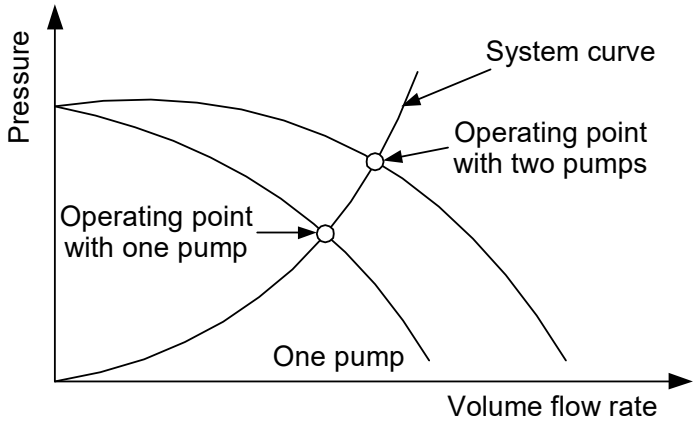

Figure 5.15 System curve for parallel pumps (pumps of different capacity)

In systems where high pumping pressures are required, pumps arranged in series, as shown in Figure 5.16 are used. In series pumping arrangements, the multiple pumps need to be selected to have the same flow capacity.

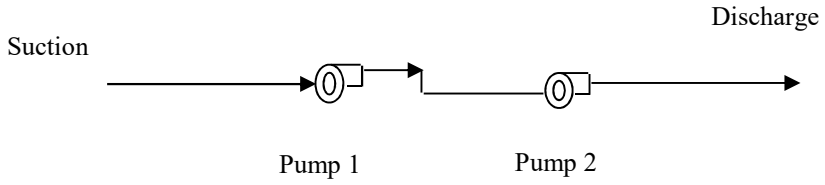

Figure 5.16 Arrangement of pumps operating in series

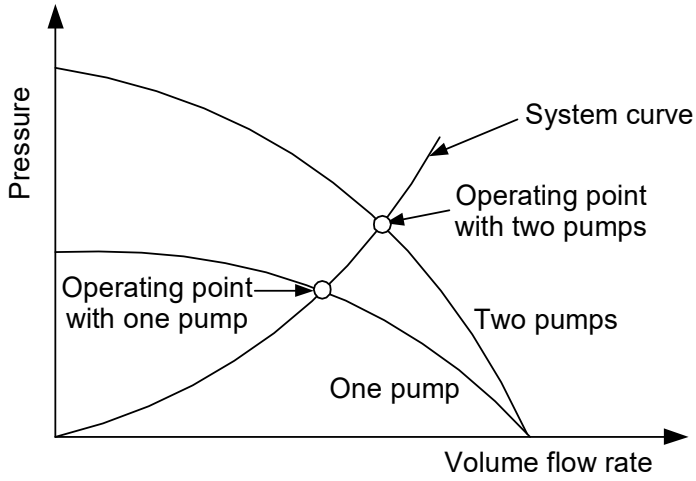

Figure 5.17 System curve for series pumps (different capacity pumps)

5.8 Pump sizing

When designing pumping systems, it is essential to ensure that the capacity of the pumps selected is sized correctly without over-sizing them which otherwise results in energy wastage.

Pumps are sized to provide the design flow requirements while overcoming the various resistances in the system. Friction losses in piping and losses across valves and fittings are normally estimated based on manufacturer data and research data. Due to the uncertainty of these estimated values and provision for possible changes during installation to suit site constraints, safety factors are usually added to the design. The safety factor used can range from a few percent to as high as 100%. As

a result, a pump can end up being oversized for a particular application, as illustrated in Figure 5.18.

The figure illustrates a case where the system curve used at the design stage has a high safety factor incorporated into it. The pump is selected to intersect this design system curve at the design flow to give the design operating point. However, since the design system curve has a high safety factor, the actual system curve that the pump experiences may be quite different. This results in the pump operating point moving along the pump curve to where it intersects the actual system curve. This leads to a higher than required pump flow.

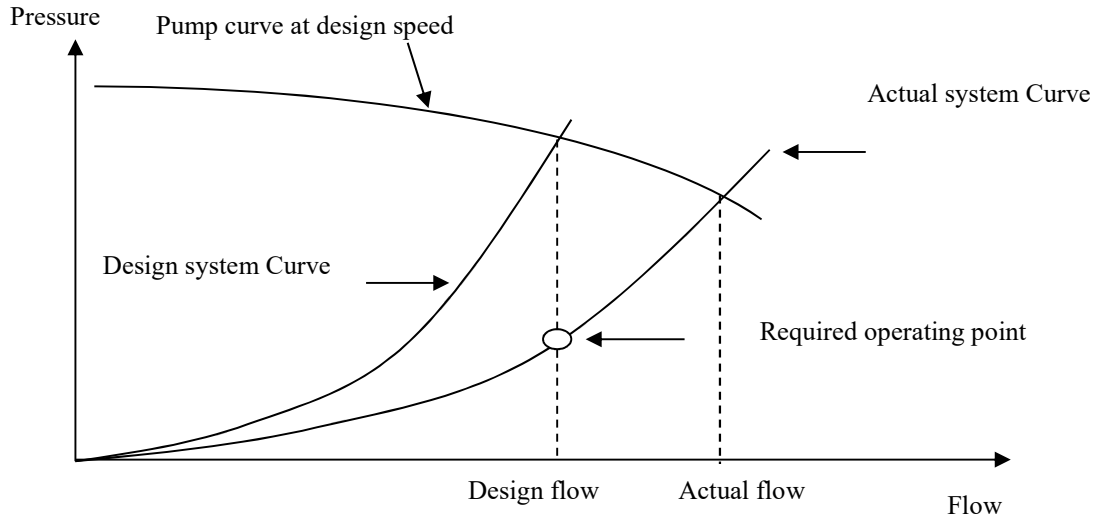

Figure 5.18 Oversized pump for application

When pumps are oversized, they are either operated to give higher than the required flow or an artificially created pressure loss is induced in the system by adding a throttling valve to achieve the required flow rate. Usually globe valves or balancing valves are used to add a sufficient resistance to the system to move the actual system curve so that it intersects the pump curve at the original design operating point as shown in Figures 5.19 and 5.20.

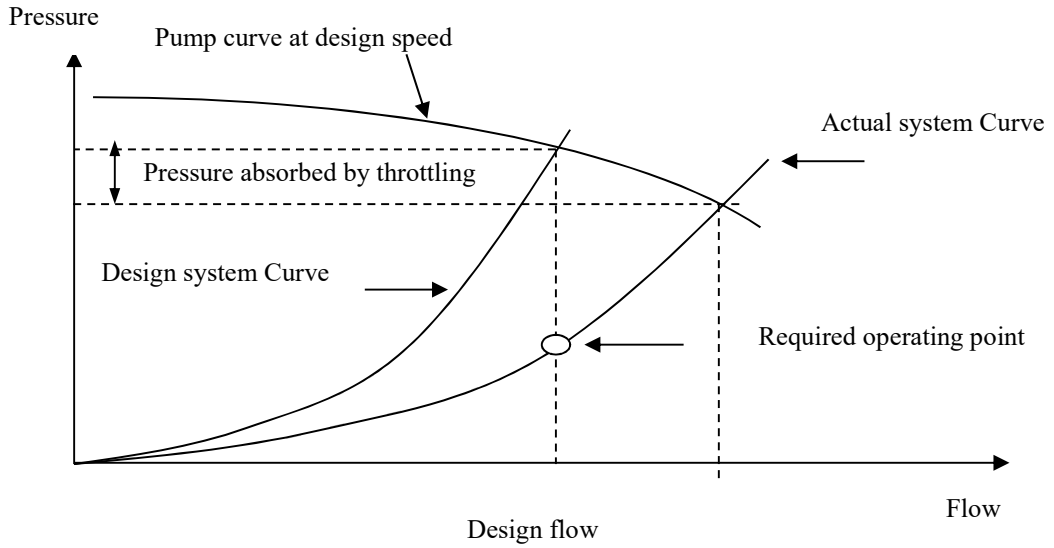

Figure 5.19 Oversized pump with throttling

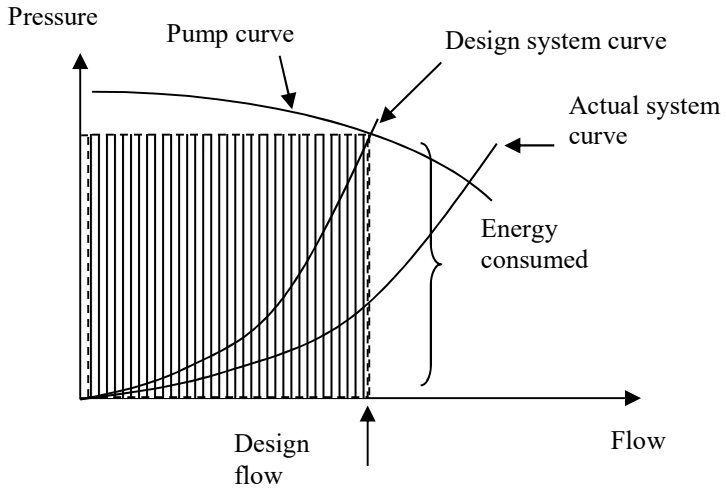

Figure 5.20 Energy consumed by pump which is “throttled” to give the design flow

Although operationally it may be possible to tolerate these options, they should not be accepted from an energy efficiency point of view as higher than required flow or pressure results in higher pumping power consumption.

In such a situation, the design flow rate can be achieved by reducing the impeller diameter (trimming impeller) or reducing the speed of the pump (using a VSD). VSDs are also sometimes called variable frequency drives (VFDs) or adjustable frequency drives (AFDs). They are devices which can convert the frequency of the utility power supply and provide an adjustable output voltage and frequency to vary the speed of motors.

The resulting energy savings due to speed reduction and impeller diameter reduction is illustrated in Figure 5.21.

Whether to reduce the speed or impeller diameter normally depends on the relative cost for the two options as well as other factors such as the possibility of variable flow applications or possible rise in demand for flow in the future. Normally, reducing the pump speed using a VSD is preferable since it can be used to vary the pump speed and capacity when the load changes. Also, reducing the impeller diameter can result in a bigger drop in pump efficiency as compared to use of VSDs for reduction of speed. However, if the existing pump is old and due for replacement, the option of replacing the pump with a correctly sized new pump should also be considered.

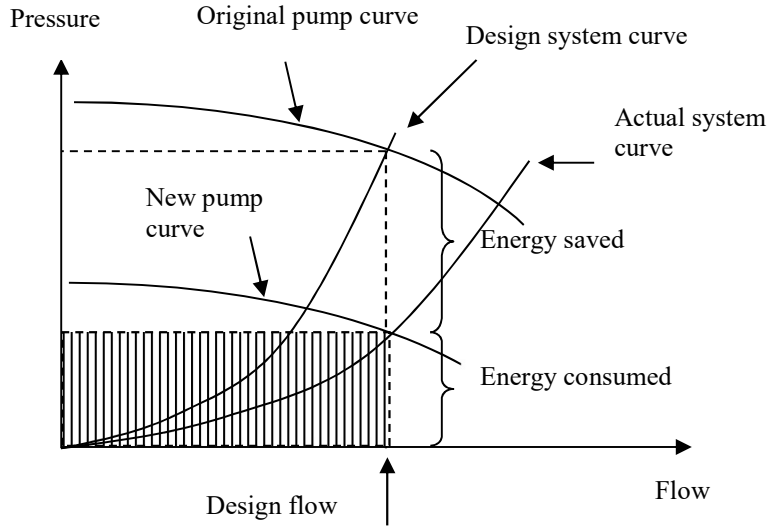

Figure 5.21 Energy consumed by the same pump if impeller diameter or speed is reduced to give the design flow

5.9 Constant flow vs variable flow systems

In variable load systems, pumps are sized to meet the peak load conditions. At part-load, throttling valves are often used to reduce the capacity of pumps to match the load conditions. Alternatively, VSDs can be used to reduce the capacity of pumping systems at part-load to save energy as shown in Figures 5.22 and 5.23.

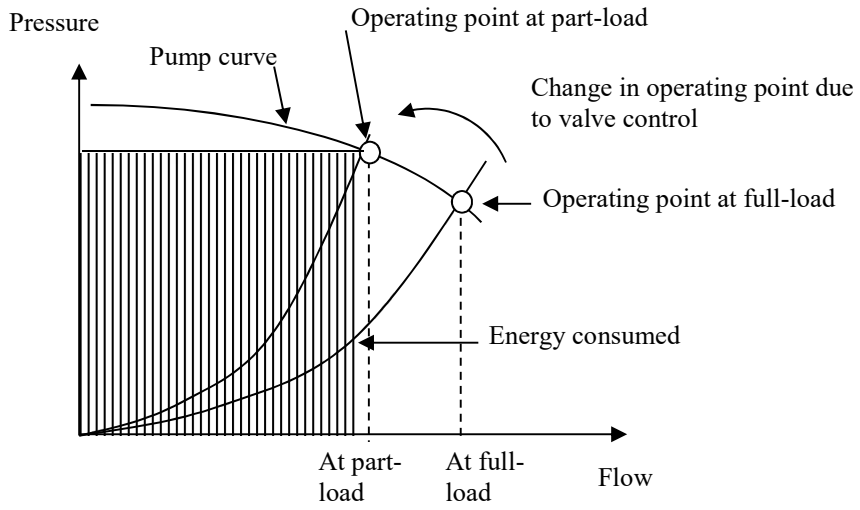

Figure 5.22 Pump operating point with constant speed pump with throttling at part-load

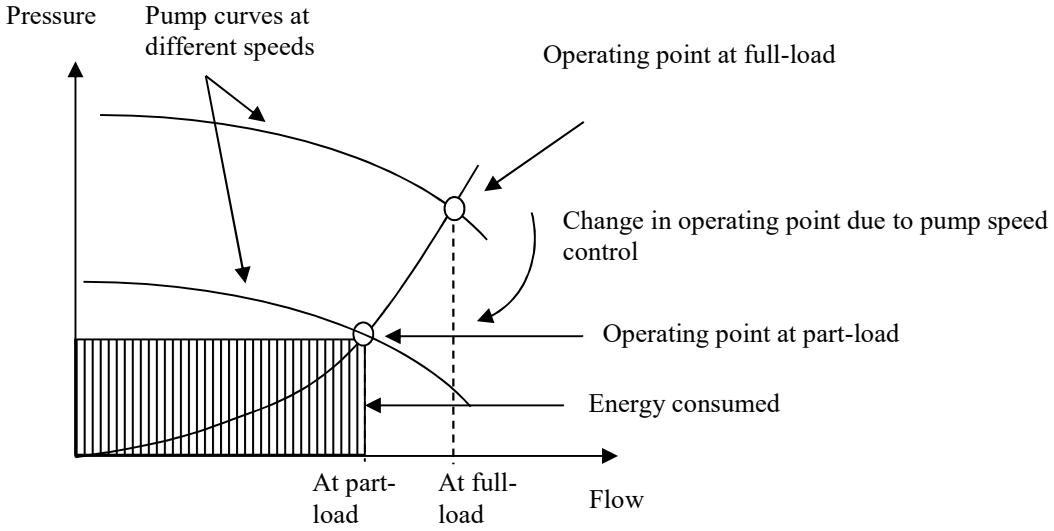

Figure 5.23 Pump operating point for system with variable speed pumping at part-load

5.10 Effect of pump speed and size on efficiency

The capacity of pumps depends on impeller size and operating speed. For a particular operating condition, the same pump may be able to provide the required capacity by using different combinations of impeller sizes and operating speeds. However, as the pump operating efficiency can vary for the different selections, the required pump power may also be different for each selection.

Figures 5.24 and 5.25 show two different combinations of impeller sizes and pump speeds, both of which are able to provide a desired pump capacity of 125 l/s flow rate and a head of 40 m. As can be seen from the two pump curves, the pump operating at the lower speed requires 66 kW, whereas the other pump requires only 63 kW (indicated using green colour dashed lines).

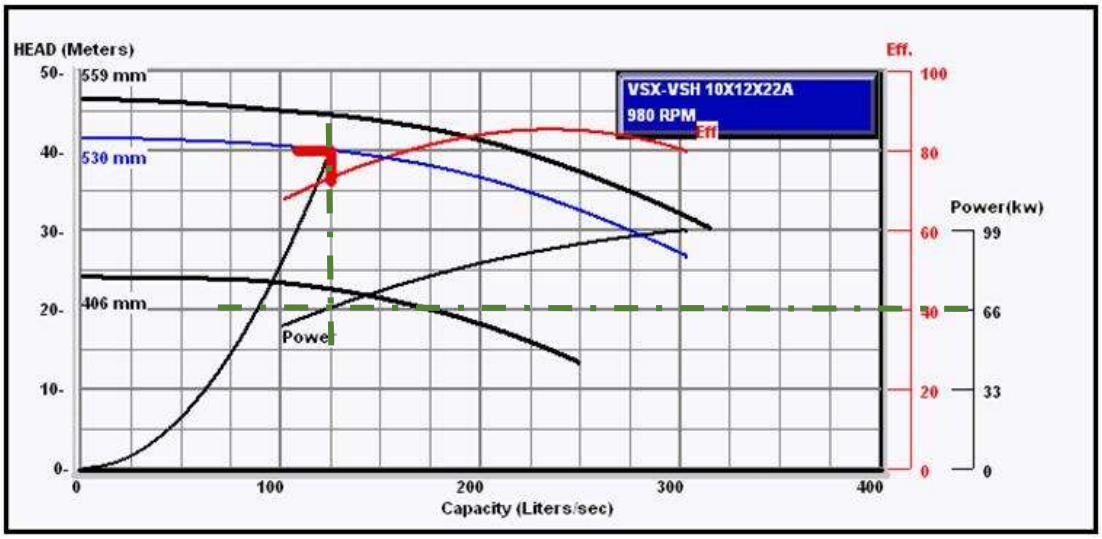

Figure 5.24 Pump operating point for a pump operating at 980 rpm (courtesy of ITT Bell & Gossette ESP-Plus pump selection software)



Figure 5.25 Pump operating point for a pump operating at 1480 rpm (courtesy of ITT Bell & Gossette ESP-Plus pump selection software)

Like pump speed and impeller size, the capacity of pumps also affects the operating efficiency. Generally, higher capacity pumps tend to have better operating efficiency

when compared to smaller capacity pumps. Therefore, for a particular application to ensure extra redundancy of pumps, if two pumps are selected each based on 50% of the maximum expected load, instead of one larger pump to meet 100% of the load, the total pump power when operating at 100% load could be higher for the case with two pumps (as illustrated in Figures 5.26 and 5.27).

Figure 5.26 shows that the operating efficiency for a pump sized for a flow rate of 300 l/s and head of 30 m is 84.4%. However, if two pumps are selected for the same application, each with a capacity of 150 l/s and head of 30 m, the pump efficiency at the operating point would be about 81 %. As a result of the lower efficiency, if one pump is used, the pump power consumption will be 105 kW compared to 110 kW (55 kW x 2) required for the two smaller pumps.

Although in the situation described above the higher capacity pump has a better efficiency, this may not be the case for all applications. Also, if the application involves a varying pumping load, then having smaller multiple pumps may be better than having one large pump as smaller pumps can be switched off when the load is low.

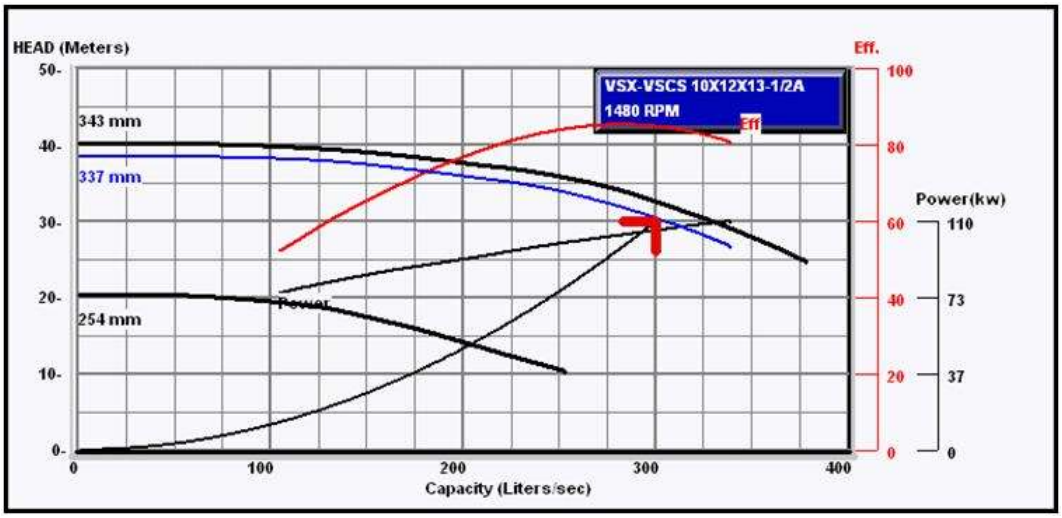

Figure 5.26 Pump operating point for pump sized for 100% of the capacity (courtesy of ITT Bell & Gossette ESP-Plus pump selection software)

Generally, since pump operating efficiency is dependent on many factors such as pump type, model, capacity and operating speed, it is recommended to use a pump selection software or consult pump vendors when selecting pumps or designing pumping systems.

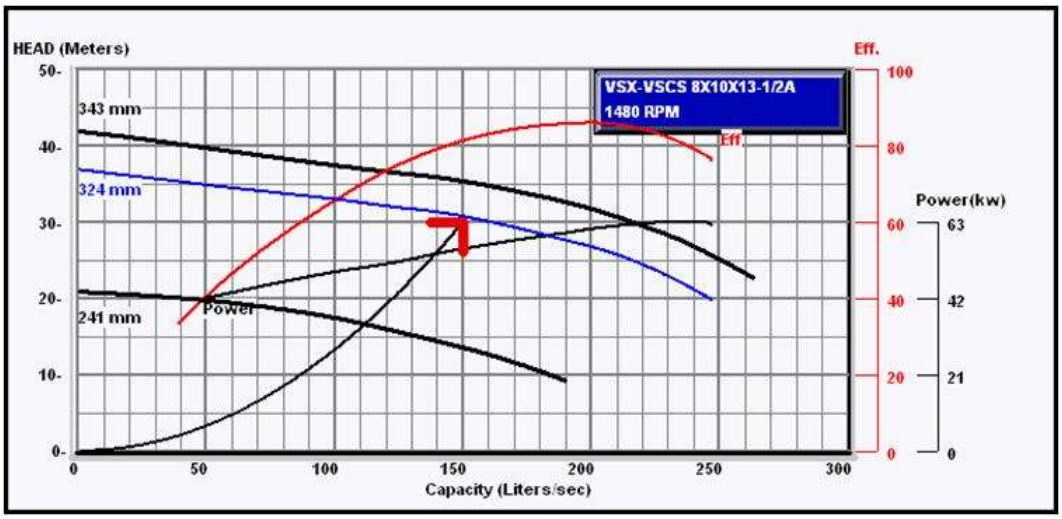

Figure 5.27 Pump operating point for pump sized for 50% of the capacity (courtesy of ITT Bell & Gossette ESP-Plus pump selection software)

5.11 Avoiding use of bypass systems

Often when pumps are oversized for the application, part of the fluid discharged from the pump is circulated back to the suction of the pump through a "bypass" arrangement as shown in Figure 5.28. Although such a system is able to provide the design flow requirement to the load, much pumping energy is wasted due to the bypassing action. This energy loss can be eliminated by reducing the capacity of the pump by trimming the impeller diameter or reducing the pump speed so that the pump operating point can be moved to provide the required flow rate.

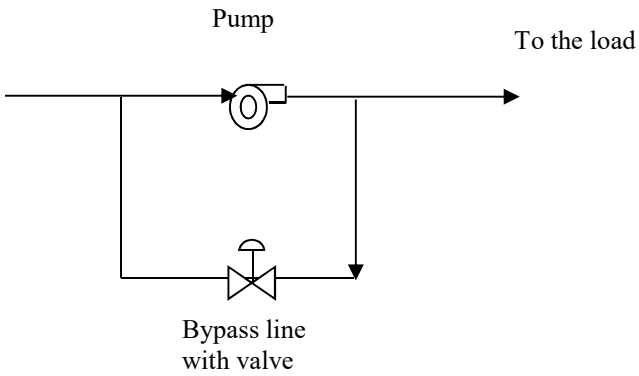

Figure 5.28 Pump with typical bypass arrangement

5.12 Use of small pumps to augment larger pumps

In some systems, the pumping capacity required at peak load and at other times can be significantly different. For example, in sewage systems, the pumping capacity

required under normal conditions will be much lower than that required during a heavy storm. In such applications, if the pumps installed are selected based on peak demand, the pumps will operate at low efficiency for most of the time.

A possible solution for such situations is to install a small pump, sometimes called a “pony” pump to handle the normal load while a larger pump is installed to handle the peak load.

5.13 Designing to minimise pressure losses

When a liquid flows through a piping system, head or pressure losses take place due to fluid friction in the piping and resistance offered to the flow by the various devices such as valves, strainers, and bends used in the piping system.

The friction losses depend on the pipe material, length of the piping, fluid velocity and properties of the fluid. Therefore, for a given fluid such as water, the friction losses can be reduced by minimising pipe length and reducing flow velocity (by increasing pipe diameter).

On the other hand, for a particular flow velocity, losses due to various fittings and devices installed on piping systems depend on the design of the device or fitting. Therefore, for a given flow velocity, different types of valves can have different losses associated with them.

The losses for different types of valves can be significantly different and therefore one has to be careful when selecting valves for different applications. For instance, globe type valves are sometimes used as isolation valves in piping systems. These valves have a high pressure drop even when they are fully open due to the change in direction the flow has to make when passing through them. On the other hand, butterfly valves when fully open offer little or no resistance to the flow. Therefore, to minimise pumping energy consumption, valves with low resistance (when fully open) such as butterfly valves should be used for flow isolation.

Further, pipe fittings such as bends, elbows, tees, and flow transition devices should also be selected to minimise head losses in the system as illustrated in Figures 5.29 and 5.30.

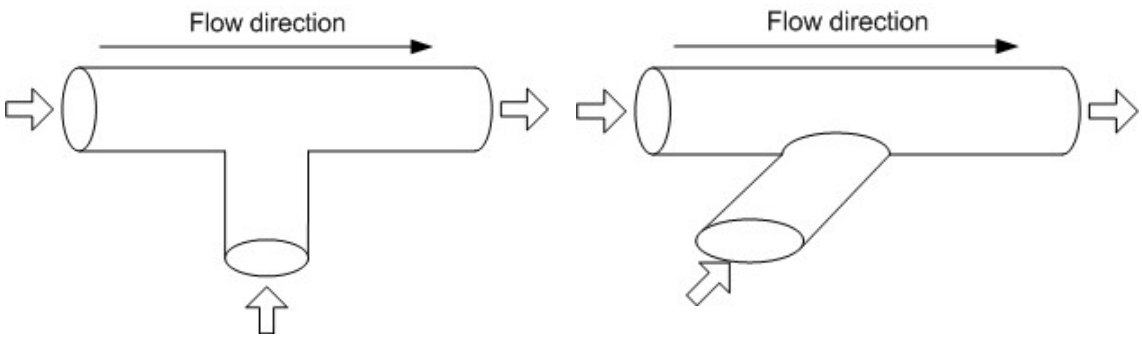

Conventional Tee Arrangement of Tee to minimise losses

Figure 5.29 Design of Tees to reduce pressure losses

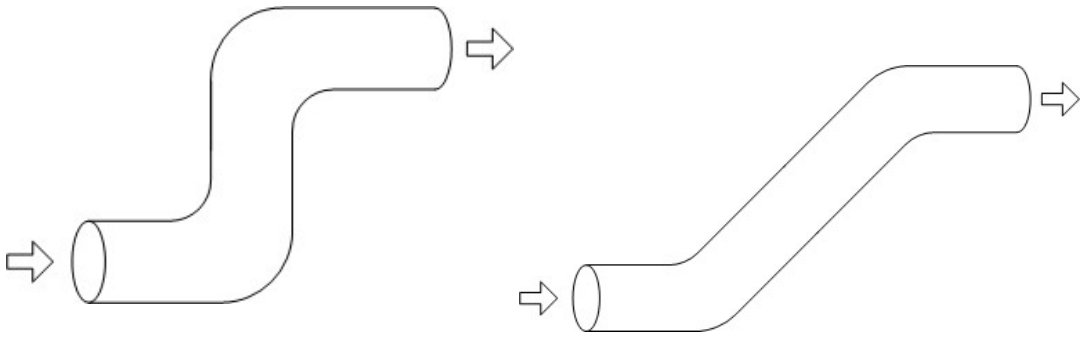

Conventional arrangement of bends Arrangement of bends to minimise losses

Figure 5.30 Design of bends to reduce pressure losses

In piping systems which use “common headers” to serve multiple equipment with different pressure losses, “balancing valves” are installed to ensure that the equipment receives the design flow rate (Figure 5.31).

Since balancing valves regulate the flow rate by inducing pressure losses to equalize the pressures through the different branches, pumping energy can be reduced by designing the piping arrangement to be a one-to-one system so that the balancing valves can be eliminated as shown in Figure 5.32.

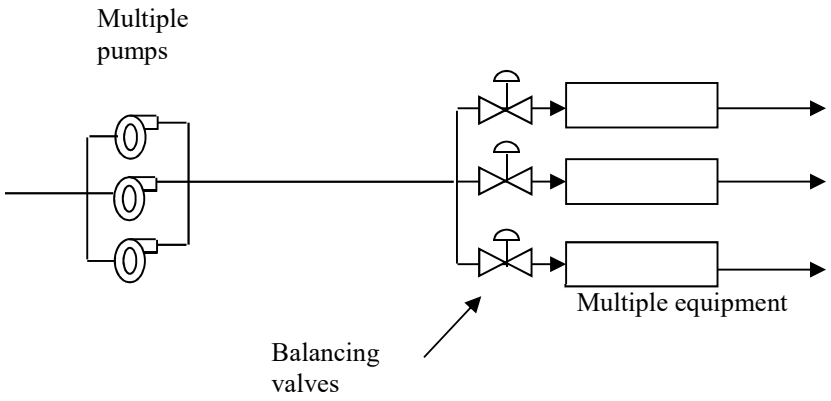

Figure 5.31 Arrangement with balancing valves

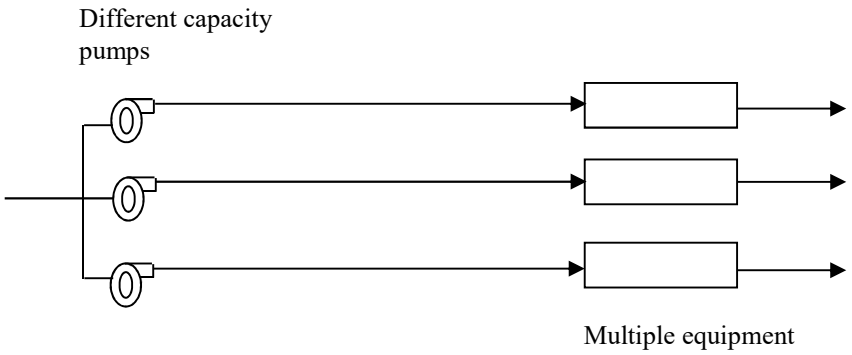

Figure 5.32 One-to-one arrangement to avoid use of flow balancing

5.14 Eliminating triple-duty valves

Often, balancing valves and triple-duty valves are installed just after a pump to adjust the flow rate (Figure 5.33). Triple-duty valves also act as check valves and isolation valves. Both these types of valves induce significant pressure losses even when fully open.

Table 5.4 shows typical data for pressure losses across a triple-duty valve for a 1000 GPM (gallons per minute) flow rate when the valve position is adjusted from 100% open to 30% open.

Valve opening percentage	Approximate pressure loss in metres of water
100	1.0
90	1.0
80	1.0
70	1.5
60	2.0
50	2.5
40	4.0
30	6.0

Table 5.4 Pressure losses for a triple-duty valve

The use of such valves should be avoided. Pump flow rate should be adjusted by changing the pump speed (using VSD) as explained earlier. Normal check valves and isolation valves with low pressure drop should be used where required.



Balancing valve



Triple-duty valve

Figure 5.33 Images of balancing and triple-duty valves

Example 5.6

A pumping system is designed for 63.2 l/s (1000 GPM). The triple duty valve installed at the discharge of the pump is at 40% open position. Compute the reduction in pump shaft power that can be achieved if this valve is removed. Take the pump efficiency to be 75%.

Solution

Using equation (5.3),

Reduction in pump power $= \frac{0.0632 \times 4 \times 9.81 \times 1000 \ (N/m^2/m)}{1000 \times 0.75}$

$= 3.3$ kW

5.15 Eliminating constant flow valves

Similar to balancing valves and triple-duty valves, constant flow valves are also often installed in piping systems. As the name suggests, the function of this type of valve is to provide a relatively constant flow rate irrespective of the system pressure. An image of a constant flow valve is shown in Figure 5.34. Although it is called a valve, the appearance is quite different from normal types of valves as it has no provision for external adjustment of the flow rate.

Constant flow valves have a number of openings internally for the liquid to flow. However, the cross-sectional area available for flow is varied by spring loaded plungers which move inside these openings, thereby adjusting the area. The spring tension of the plungers is set to achieve the desired flow rate. Therefore, if the pump in a particular system is oversized, the higher pressure at the inlet of the constant flow valves moves the plungers to restrict the open area available for flow and adjusts the flow rate to the required value.



Figure 5.34 Image of a constant flow valve

This type of valve should also be avoided as they automatically adjust the internally induced pressure losses to achieve the design flow. As stated earlier, if the pumping system flow rate requires reduction, this should be achieved using a VSD.

5.16 Pump entry and discharge losses

Pumps work most efficiently when the fluid is delivered to the suction with minimum turbulence. To achieve this, there should be at least 5 pipe diameters of straight piping before the pump. Fittings such as, elbow, reducer, valve, or strainer should not be installed just before the pump suction.

If it is not possible to make provision for a sufficient settling distance in the pipework before the pump, an inline flow conditioner or straightener can be used.

Normally, suction-side piping is one or two sizes bigger than the pump inlet. Piping that is smaller than the pump inlet should never be used as it will result in high friction losses.

If a reducer is required before the pump inlet (suction side pipe larger than pump inlet), an eccentric reducer orientated to eliminate the possibility of air pockets, should be used (Figure 5.35).

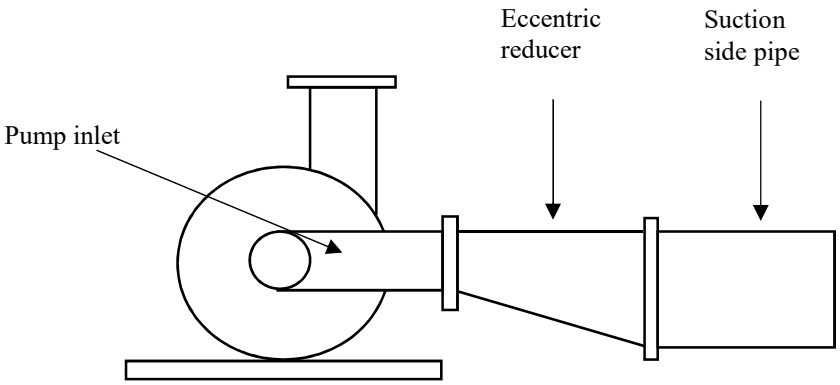

Figure 5.35 Arrangement of an eccentric reducer

Similarly, fittings such as elbows, tees and valves immediately after the pump discharge should be avoided. As explained earlier, use of balancing valves, constant flow valves and triple duty valves should also be avoided.

5.17 Pump efficiency

The equation for pump brake horsepower in kW, equation (5.3),

$$\text{Pump impeller power (kW)} = \frac{\text{Flow rate (m}^3\text{/s) x Pressure difference (N/m}^2\text{)}}{\text{1000 x Efficiency}}$$

Therefore, to minimise pumping power, the pump efficiency should be as high as possible. This can be done by selecting suitable pumps that have a high efficiency (above 85%) at the desired operating point.

Figures 5.36 and 5.37 show two sets of pump curves for pump A and pump B respectively. Both pumps are able to operate at the desired operating point of flow rate Q and pressure P. However, based on the performance curves, pump A will operate at 90% while pump B will be able to operate at only 78% (estimated by interpolation) at the desired operating point. Hence, pump A should be chosen.

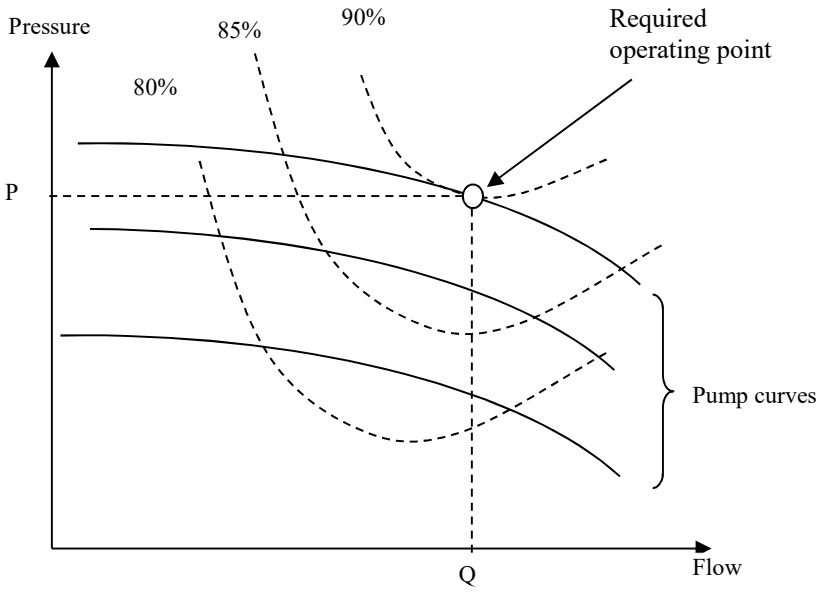

Figure 5.36 Operating point for pump A

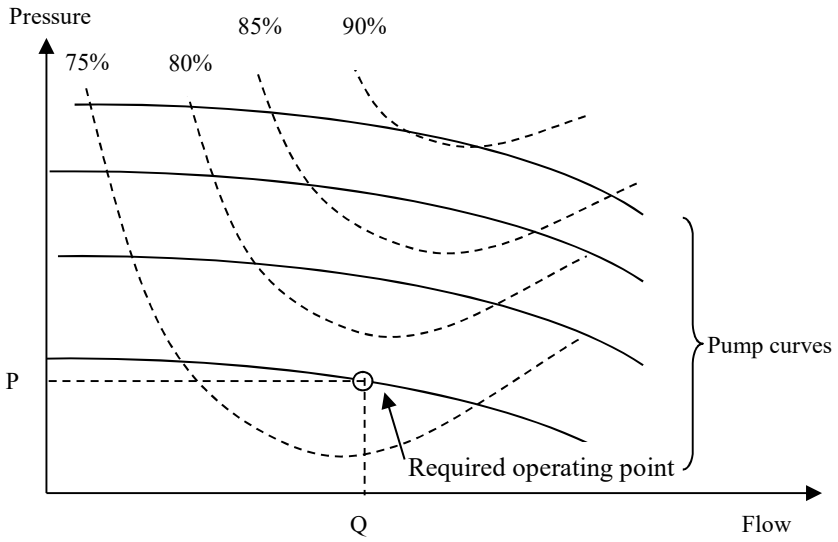

Figure 5.37 Operating point for pump B

5.18 Case studies on optimisation of pumping systems

Case study 1 – Pumping system optimisation for a power plant

Case study data courtesy of PacificLight Power Pte Ltd

Introduction

One of the common types of power generation cycle is the steam turbine cycle where high-pressure steam generated in a boiler is expanded in a steam turbine which is coupled to an alternator. The low-pressure steam exiting the turbine is condensed and fed back to the boiler. The steam turbine cycle is often combined with a gas turbine cycle to form a “combined cycle” plant to improve the overall efficiency of the power generation cycle. The arrangement of a combined cycle plant is shown in Figure 5.38.

In this arrangement, the feedwater pump supplies water to the boiler to maintain the water level in the boiler. Usually, the feedwater supply to the boiler is controlled using a control valve installed after the pump (Figure 5.39). This control valve opening is modulated to vary the water flow rate to the boiler.

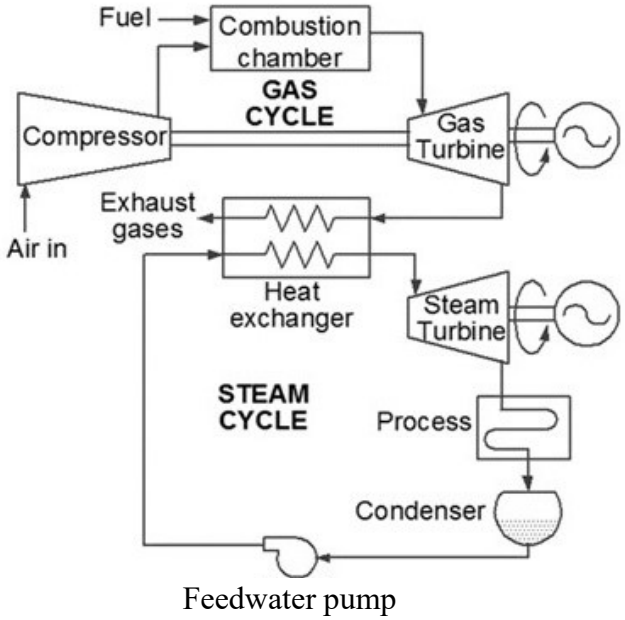

Figure 5.38 Arrangement of a typical combined cycle power plant

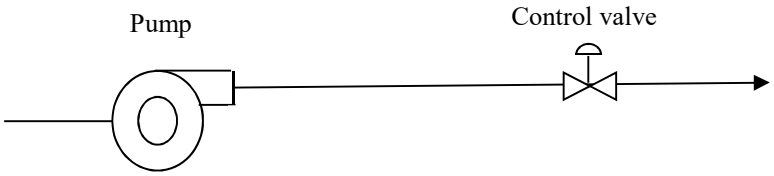

Figure 5.39 Arrangement of the feedwater pump and control valve

The above operation results in the pump operating point moving along the pump curve as shown in Figure 5.40.

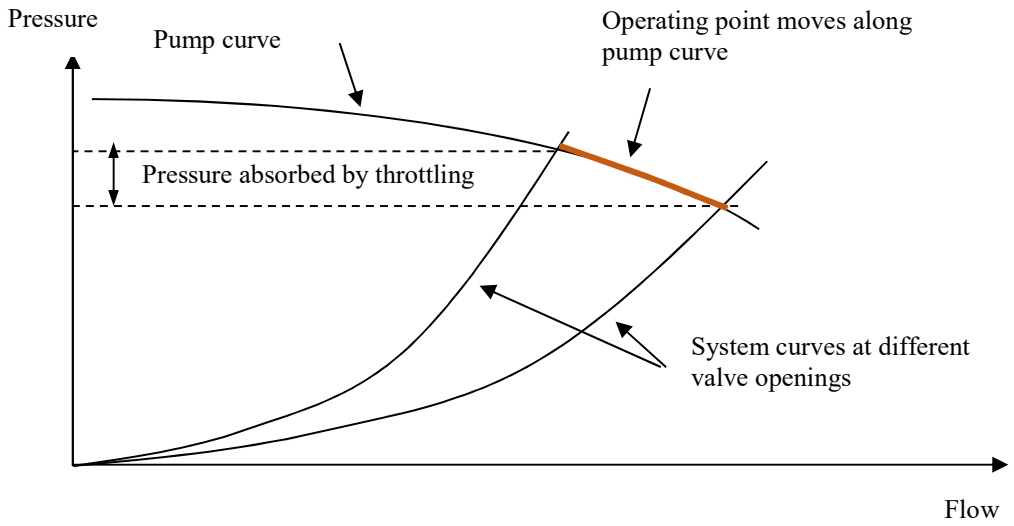

Figure 5.40 Pump operation for constant speed feedwater pump

If a variable speed pump is used for this application, the pump speed can be adjusted to vary pump capacity so it can match the changes in demand. As a result, the pump operating point can move along the system curve (rather than the pump curve), as shown in Figure 5.41.

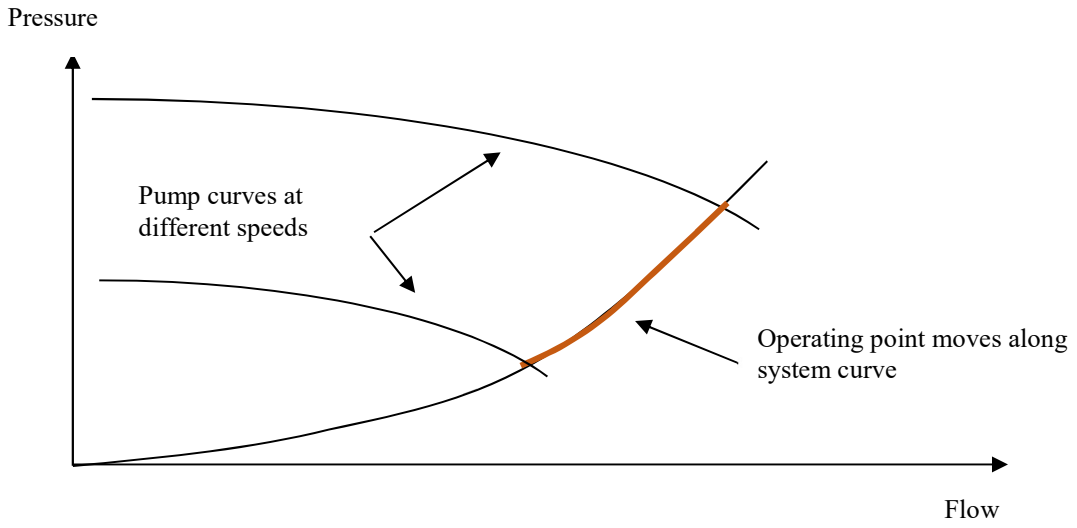

Figure 5.41 Pump operation for variable speed feedwater pump

In many cases, the feedwater pump is also oversized and as a result, the control valve is heavily throttled (even at full-load). In such a situation, if a VSD is installed for the feedwater pump, the operating point will move to a different system curve (with lower pressure losses).

The energy savings that can be achieved by installing a VSD for such a feedwater pump are illustrated in Figure 5.42.

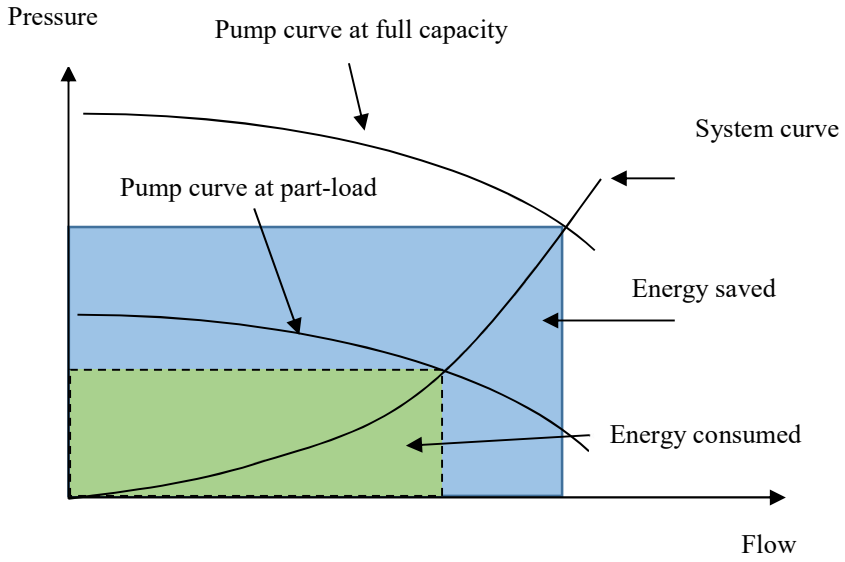

Figure 5.42 Illustration of energy savings

Data from an actual project

The improvement project involved installing a VSD for a feedwater pump serving the boiler of a combined cycle power generator. The rated capacity of the power generator is 400 MW. The feedwater pump motor is 2-pole, rated capacity of 2500 kW and operated with 6.6 kV power supply.

The system operating configuration before and after installing the VSD is shown in Figures 5.43 and 5.44 respectively (ΔP indicates the pressure loss induced by the control valve).

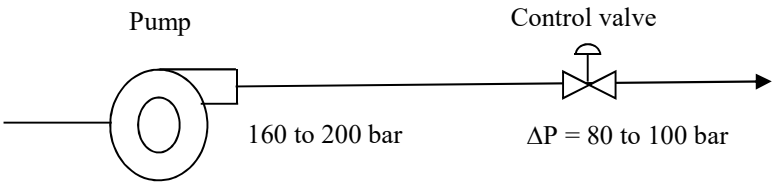

Figure 5.43 Pre-retrofit operation

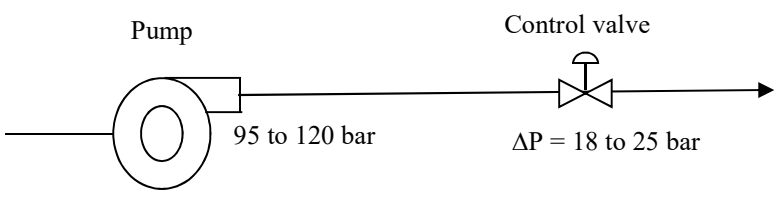

Figure 5.44 Post-retrofit operation

The overall power savings achieved are shown in Figure 5.45.

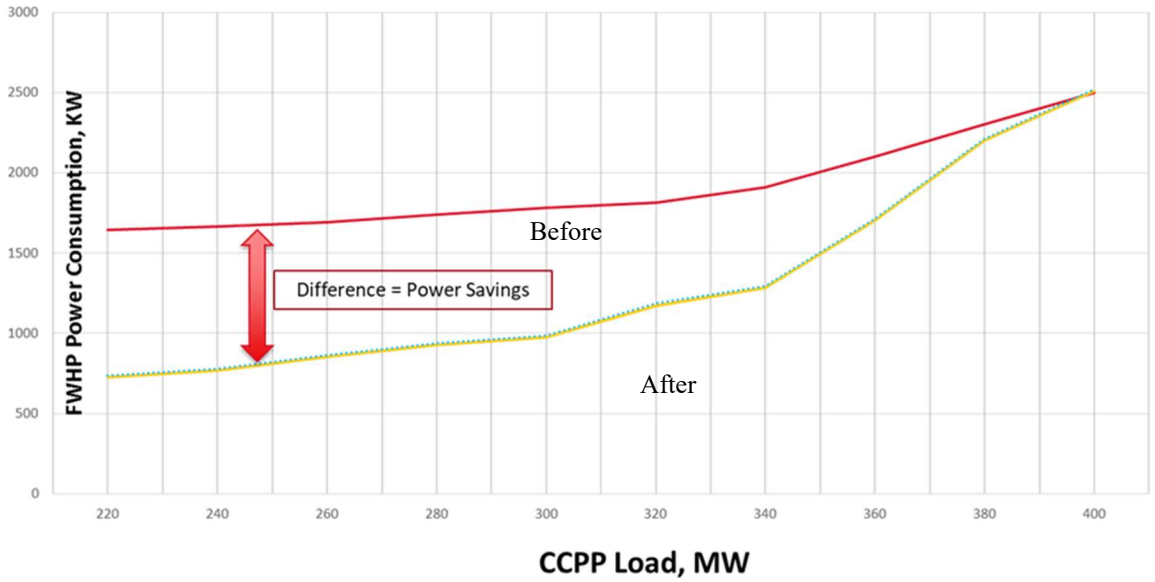

Figure 5.45 Power savings achieved

Case study 2 – Optimisation of a municipal water distribution system

Information courtesy of Grundfos (Singapore) Pte Ltd

Introduction

Municipal water supply systems are used in most cities to supply treated water to consumers. Such systems normally operate 24 hours a day and high capacity pumps are used to supply water through long piping distribution networks. The demand for water normally varies throughout the day and a typical demand pattern is shown in Figure 5.46.

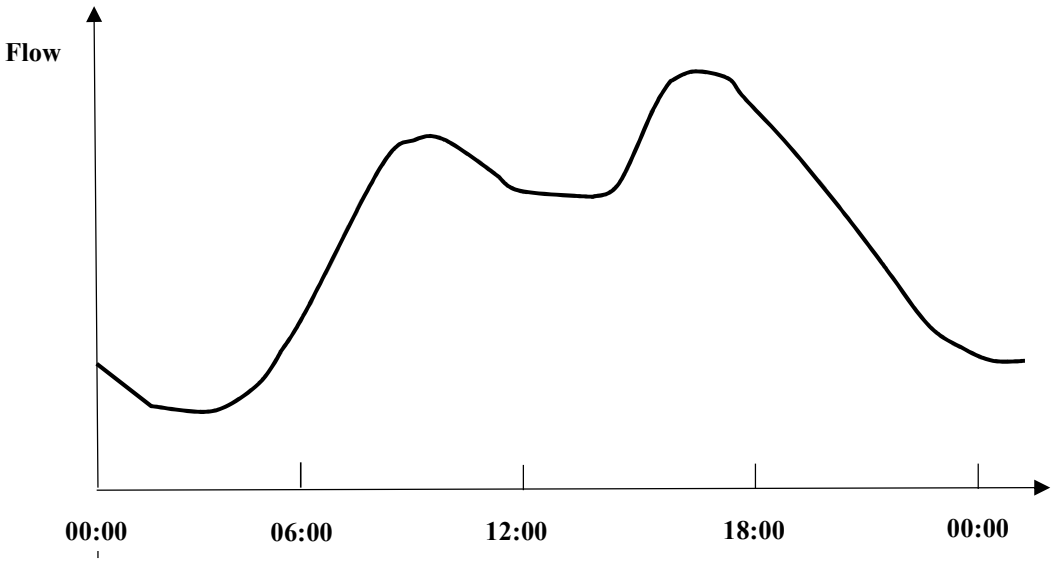

Figure 5.46 Typical demand pattern

Normally, large constant pressure pumps are used for such applications. Since the demand does not remain constant (Figure 5.46), the pressure losses in the distribution system also vary throughout the day. Therefore, when the demand is high, the pressure losses increase and when the demand reduces, the pressure losses decrease.

Therefore, during periods of low demand, pumps selected based on peak demand result in overcapacity and high system pressure. Such operation leads to poor pumping efficiency, pipe bursts, water leakage and high wear and tear of equipment.

Solution

A solution to overcome this problem is to use a Demand Driven Distribution (DDD) system, where the pressure at critical locations in the distribution network are monitored and used to vary the capacity of the pumping system. This way, when the demand is low, the capacity of the pumps can be reduced while ensuring that the pressure values at the critical points are sufficient to meet the consumer demand in each respective area. Similarly, when the demand rises, the capacity of the pumping system is increased to maintain the desired pressure at each critical point. Figure 5.47 illustrates the pump pressure variation for the two operating strategies.

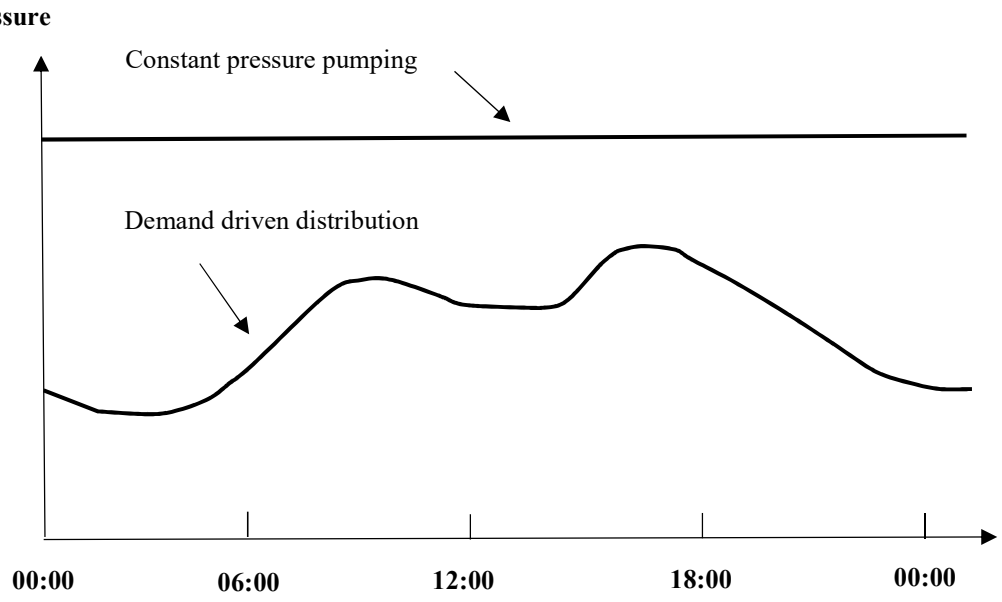

Figure 5.47 Pressure variation for constant pressure and demand driven distribution systems

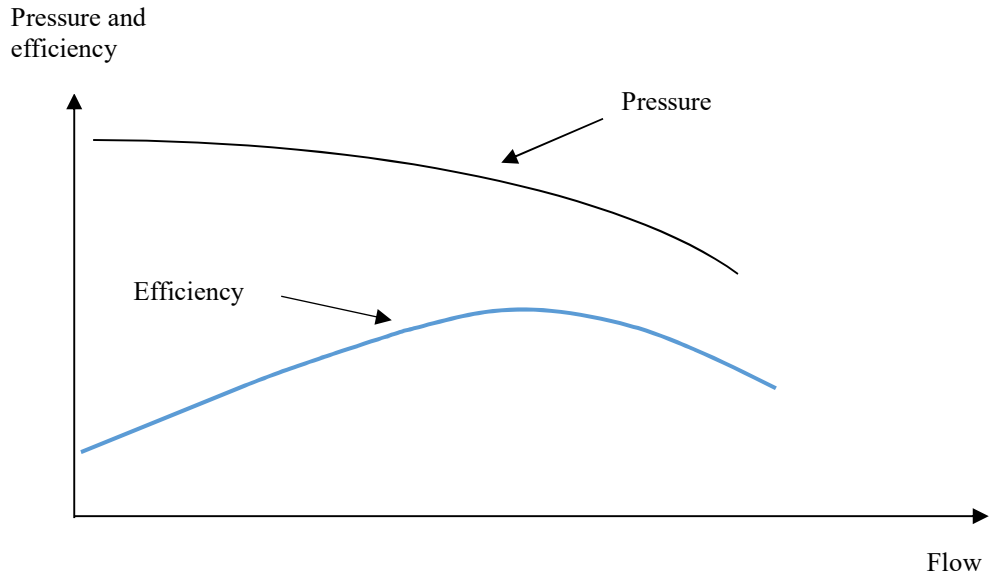

Figure 5.48 Efficiency variation when using one large pump

In addition, DDD systems are designed to have multiple small pumps rather than a few large pumps so that the pumping capacity can be better varied to match the varying demand pattern. Figures 5.48 and 5.49 show the possible variation in pump efficiency when using a single large pump or a number of small pumps to meet such varying load conditions.

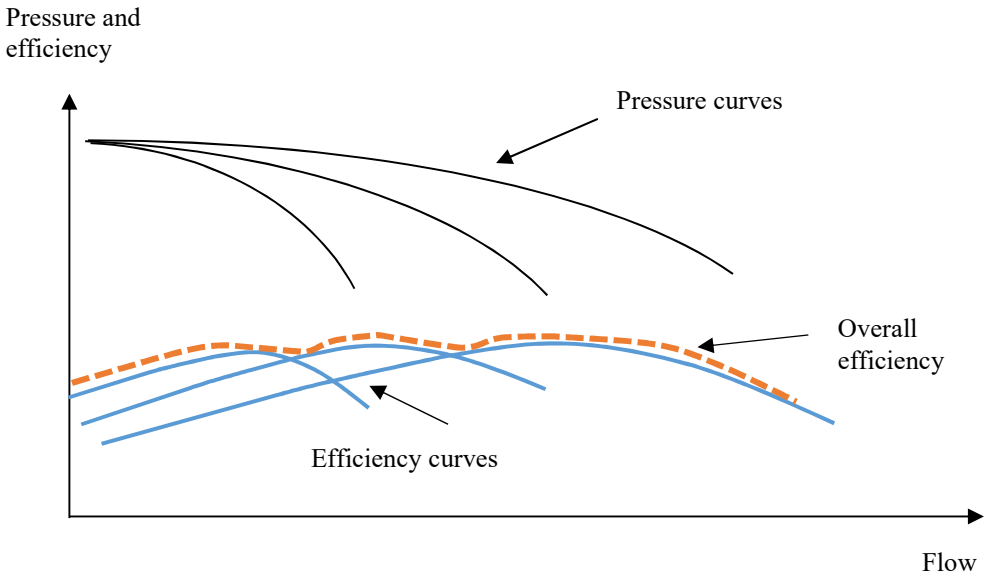

Figure 5.49 Efficiency variation when using multiple small pumps

This solution not only helps to improve and maintain good pumping efficiency, it also helps to reduce pipe bursts and leaks, and increase the life of the system components.

Data from an actual project

The improvement project involved the water distribution system in a city in Southeast Asia where the annual water consumption is 1,350,000 m^3 and the distribution pipe length is about 160 km.

Distribution pressure measured at three different critical points in the system, identified as CP1, CP2 and CP3 is shown in Figure 5.50. As can be seen from the figure, the pressure prior to implementing the DDD system varied between 0.5 and 3.5 bar.

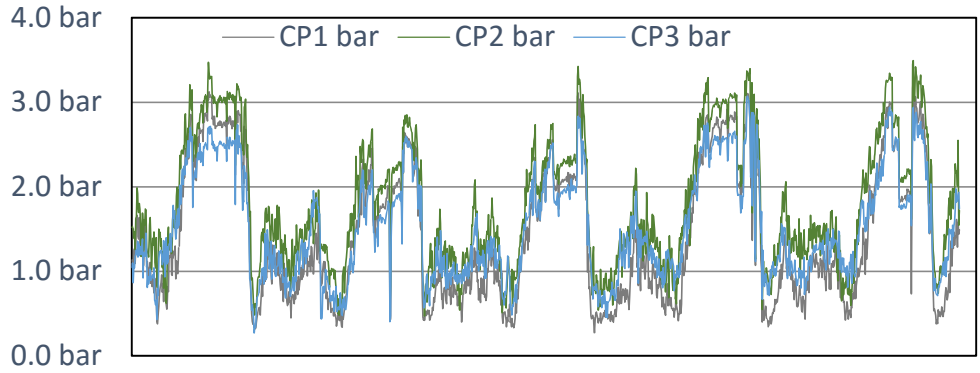

Figure 5.50 Pressure profile at critical points in the distribution system

The measured flow and pump power profiles are shown in Figure 5.51.

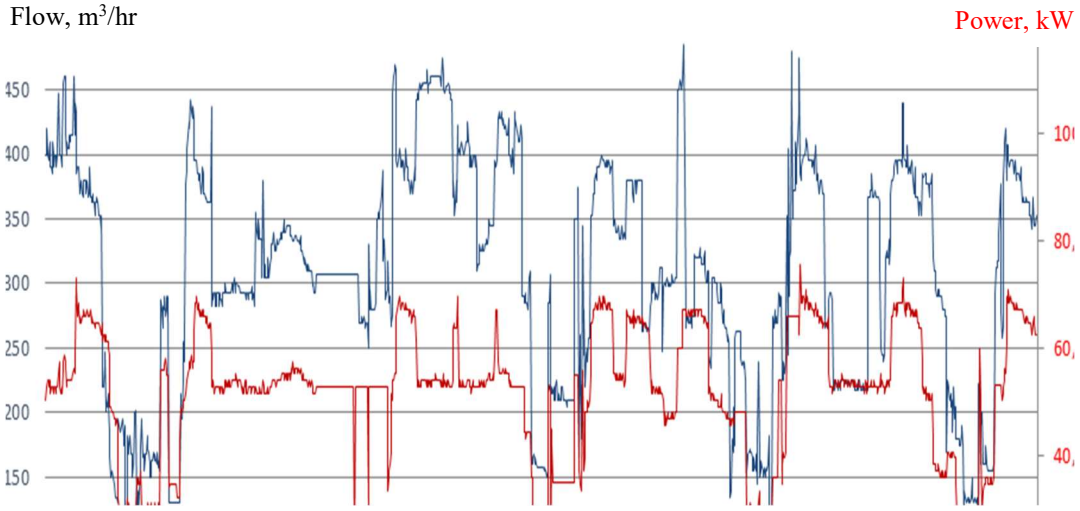

Figure 5.51 System flow and pump power profile

The flow rate, pressure, power and efficiency data for the pumping system at different operating periods (designated as Class 1 to 10) are shown in Table 5.5. The system pressure and pressure at CP1 are also indicated in the table.

Pump	Operating hours	Head	Flow	Power	Efficiency	System pressure	CP1
		m	m³/h	kW	%	bar	bar
Class 1	432	28.4	228	27.7	64.1	2.8	0.8
Class 2	471	29.9	211	28.3	61.2	2.9	0.8
Class 3	1.671	33.7	195	31.6	57.0	3.3	0.8
Class 4	1.193	33.2	177	29.7	54.1	3.2	1.1
Class 5	1.355	31.3	156	26.7	50.1	3.0	1.3
Class 6	1.355	33.8	141	25.9	51.0	3.3	1.7
Class 7	497	34.0	117	24.9	44.7	3.3	1.6
Class 8	619	32.6	104	20.7	44.7	3.2	2.1
Class 9	832	38.3	81	16.1	46.2	3.7	2.6
Class 10	335	33.8	67	150	46.2	3.3	2.3

Table 5.5 System operating data with constant pressure system

Based on the data in Table 5.5, the pressure at CP1 varied from 2.6 bar during low demand to about 1 bar during high demand.

The pumping system was redesigned and a DDD system installed. Critical point CP1 was identified as one of the locations to control the pumps. The set-point of 1.0 bar was used for CP1. The post implementation data is shown in Table 5.6.

Pump	Operating hours	Head	Flow	Power	Efficiency	System pressure	CP1
		m	m³/h	kW	%	bar	bar
Class 1	418	30.0	232	24.6	75.0	3.0	1.0
Class 2	456	30.8	214	23.7	74.0	3.0	1.0
Class 3	1.618	34.8	198	24.7	74.0	3.4	1.0
Class 4	1.149	32.0	181	20.7	74.0	3.1	1.0
Class 5	1.318	27.6	157	15.8	73.0	2.7	1.0
Class 6	1.312	26.1	143	13.7	72.0	2.6	1.0
Class 7	481	27.3	119	12.3	70.0	2.7	1.0
Class 8	600	20.9	106	8.4	70.0	2.1	1.0
Class 9	812	21.3	82	6.8	68.0	2.1	1.0
Class 10	381	19.3	58	4.3	68.0	1.9	1.0

Table 5.6 System operating data with DDD system

As can be seen from the data in Table 5.6 and Figure 5.52, the pump efficiency improved from the previous range of 44.7 to 64.1% to between 68 to 75%. The data

also indicates that the critical point, CP1 pressure is maintained at the set-point of 1 bar.

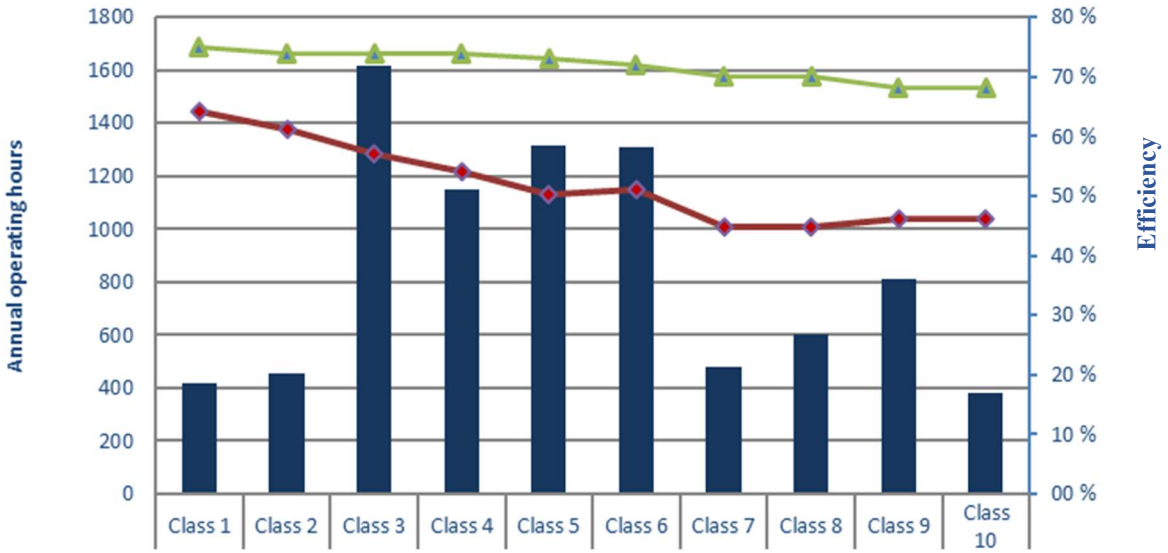

Figure 5.52 Improvement in pump operating efficiency

Case study 3 – Optimisation of a building pumping system

Introduction

This case study involves a chilled water pumping system used in a building central air-conditioning system. The schematic drawing of the chilled water pumping system is shown in Figure 5.53. The pumping system consisted of a primary-secondary system with primary pumps used to circulate chilled water in the primary circuit (mainly the chillers) and secondary pumps to distribute chilled water to the air handling units (AHUs) installed in different areas of the building.

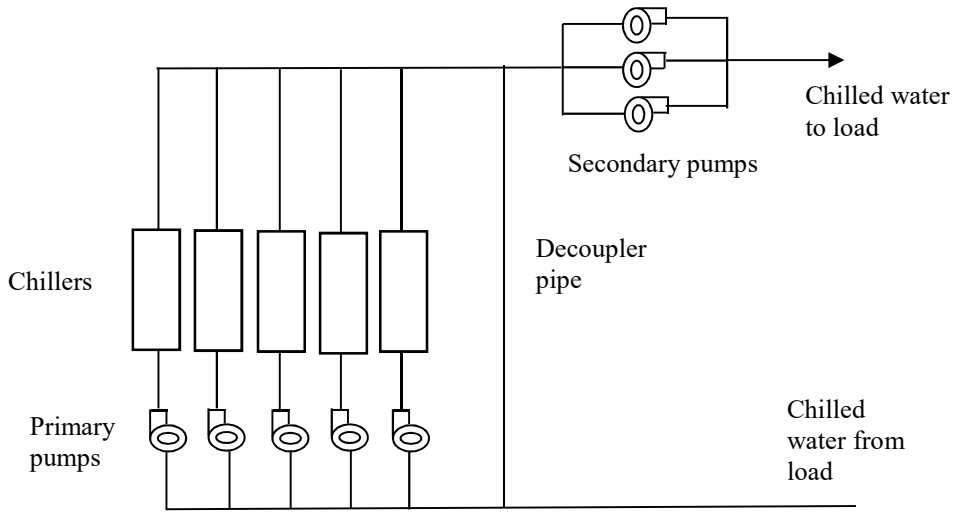

Figure 5.53 Arrangement of the chilled water pumping system

Investigation and Findings

Since the chiller system was about 20 years old, a complete replacement of the system was undertaken. As the chilled water pumping system was considered to be inefficient, the system was completely redesigned to minimise energy consumption.

During the design stage, pressure measurements were taken at various locations and the measured values are shown in Figure 5.54.

Data indicated a high pressure drop of about 1.3 bar between the chiller and the secondary pump. This high pressure drop was due to the installation of an “autoflow valve” at the discharge of the chiller. As explained earlier in section 5.15, auto flow valves are designed to provide a near constant flow rate by restricting the flow through them.

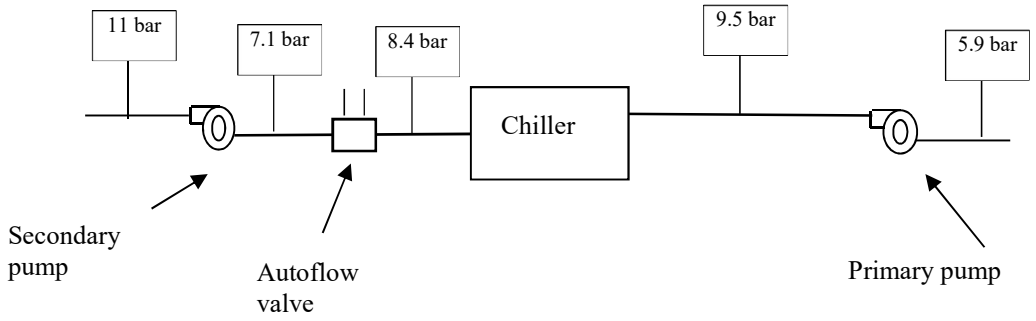

Figure 5.54 Chiller plant room pressure measurement

In addition, it was found that autoflow valves were installed at the discharge of the AHUs as shown in Figure 5.55. Through measurements, the pressure drop across the autoflow valves was estimated to be 3.0 bar.

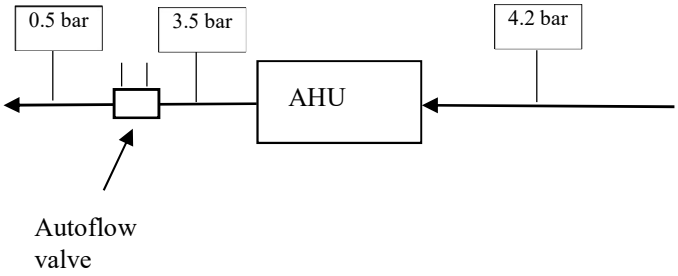

Figure 5.55 Arrangement of auto flow valve at AHUs

Design of new pumping system

The primary-secondary pumping system was replaced by a primary only pumping system. The pumps were fitted with VSDs so that the chilled water flow rate could be varied to match changes in demand. In addition, all auto flow valves were removed. The design pressure head for the new pump was 35 m which was 40 m less than the sum of the pressure heads of the original primary and secondary pumps (75 m).

Energy saving achieved

Energy saving calculations below are based on the pumps normally in operation (excluding stand-by pumps).

Baseline power consumption:

All primary chilled water pumps	= 2 x 55 kW + 30 kW
	= 140 kW
All secondary chilled water pumps	= 2 x 55 kW + 38 kW
	= 148 kW
Total baseline chilled water pump power	= 288 kW

Post-retrofit power consumption:

Total chilled water pump power	= 16.2 + 16.6 kW
	= 32.8 (≈33kW)
Power saving after the retrofit	= 288 - 33 kW
	= 253 kW
System operating hours per week	= 11 hours x 5 + 6 hours
	=61 hours
Estimated energy savings	= 253 kW x 61 hrs
	= 15,433 kWh/week
	= 15,433 x 52 kWh/year
	= 802,516 kWh/year

Summary

This chapter provided an introduction to pumps and pumping systems. Key performance characteristics and design criteria were also described. Thereafter, various energy saving measures applicable for pumping systems were presented. Finally, three case studies involving pumping system improvement projects were used to illustrate the benefits of optimising pumping systems.

References

1. ASHRAE, Handbook of Fundamentals Handbook, American Society of Heating, Refrigerating and Air-conditioning Engineers, Inc., Atlanta, GA, 2009.
2. Case study on Demand Driven Distribution pumping system, Grundfos (Singapore) Pte Ltd.
3. Improving Pumping System Performance: A source book for industry, US Department of Energy Industrial Technologies Program, 2008.
4. ITT Belle & Gossette, Pump Selection Software.
5. Jayamaha, Lal, Energy-Efficient Building Systems, Green Strategies for Operation and Maintenance, McGraw-Hill, 2006.
6. Jayamaha, Lal, Energy-Efficient Industrial Systems, Evaluation and Implementation, McGraw-Hill, New York, 2016
7. Use of VSD for feedwater pump, PacificLight Power Pte Ltd
8. Pump Handbook, Grundfos Management A/S, 2004
9. Rishel, James B, HVAC Pump Handbook, McGraw-Hill, Second Edition

6.0 COMPRESSORS

6.1 Introduction

Various types of compressors are used in industrial facilities to compress gases. The most common application is for generating compressed air, which is used for pneumatic tools, control systems, operation of machinery and manufacturing processes.

Most systems comprise compressors, filters, dryers, storage receivers, distribution systems and end users (Figure 6.1). The various components can be broadly divided into supply-side and demand-side components where the supply side consists of compressors, filters, dryers and receivers, while the demand side comprises the distribution system, storage and the end users.

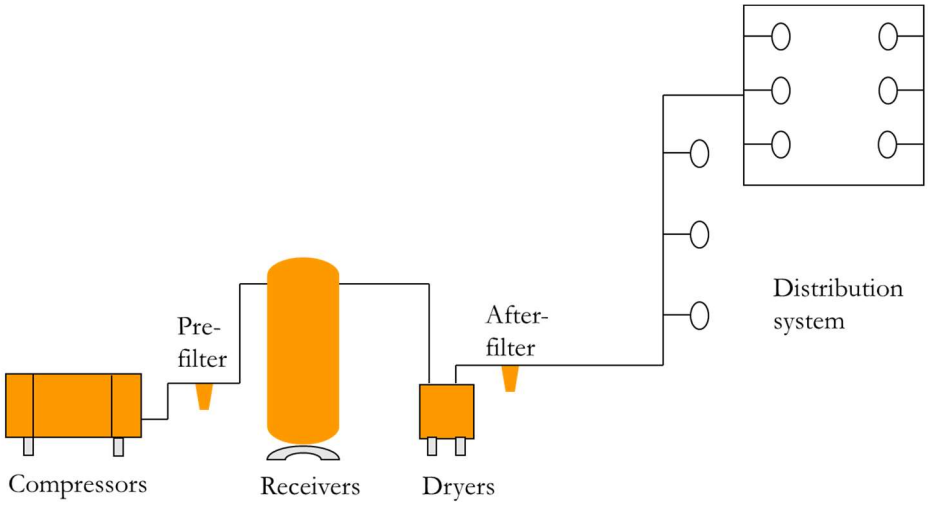

Figure 6.1 Arrangement of a typical compressed gas system

Compressed gas systems are highly energy intensive and account for a significant portion of energy consumed in many plants. Most of the energy used in compressed air systems is wasted as heat and only about 10% of the input energy is delivered in usable form as compressed air.

This chapter provides an introduction to compressors which are a common type of motor driven system used in industrial facilities. Different types of compressors and their operating principles are described. Thereafter, various energy saving measures applicable for gas compression systems are described in detail.

Learning Outcomes:

The main learning outcomes from this chapter are to understand:

1. Types of compressors and operating principles
2. Basic understanding of the compression process
3. Energy saving measures for compressors and gas compression systems

6.2 Types of compressors

The two main types of compressors are positive displacement and dynamic (Figure 6.2). In positive-displacement compressors, a fixed volume of gas is compressed in a compression chamber where the volume of the gas is mechanically reduced. In such compressors, the gas flow is constant at a particular speed, irrespective of the discharge pressure. Typical positive-displacement compressors are reciprocating, screw, scroll and rotary sliding vane, based on their respective operating characteristics.

In dynamic compressors, kinetic energy is imparted to a continuous flow of gas by a single rotor or multiple rotors operating at high speed. The imparted kinetic energy is later converted into potential energy in the discharge volute or diffuser of the compressor. Centrifugal and axial-flow compressors are dynamic compressors.

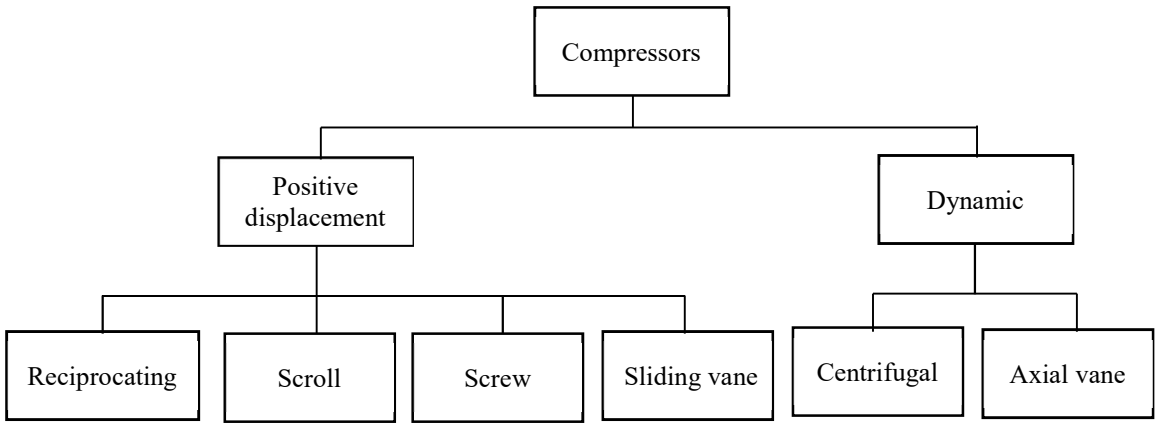

Figure 6.2 Different types of compressors

Reciprocating compressors

Reciprocating compressors use pistons and connecting rods driven by a crankshaft (Figure 6.3). The crankshaft is driven by a motor. Compression is achieved by reducing the volume within the cylinder due to the movement of the piston. Normally, reciprocating compressors have a number of cylinders in one unit. For high-capacity applications, multistage units with multiple compressors are used. In such

compressors, the gas is compressed to an intermediate pressure in the first stage and then cooled to a lower temperature before being compressed further in the second stage.

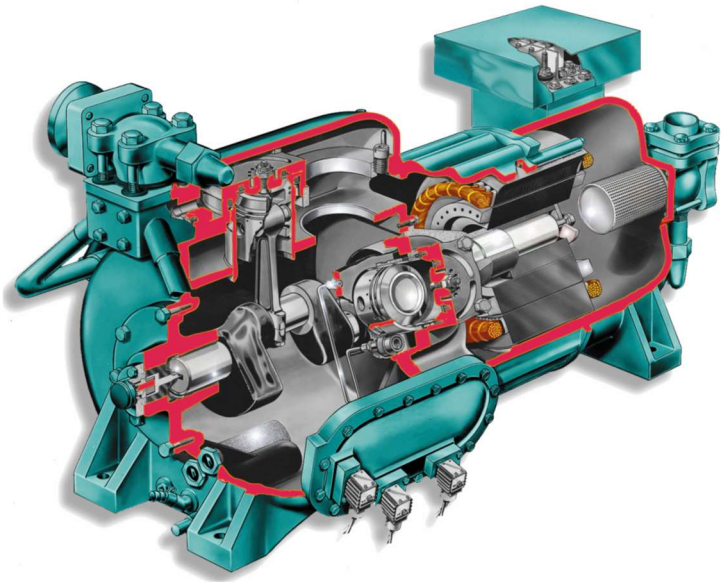

Figure 6.3 Cut-away of a reciprocating compressor (courtesy of York/Johnson Controls)

Scroll compressors

Scroll compressors use two inter-fitting, spiral–shaped scroll members as shown in Figure 6.4. One scroll rotates while the other remains stationary. Due to the profile of the scrolls, gas drawn in through the inlet port is compressed between the scrolls during rotation and then discharged at the discharge port.

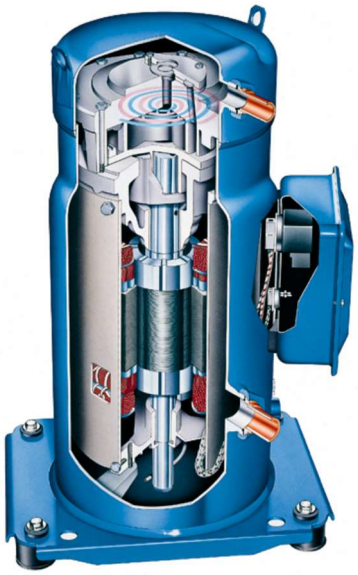

Figure 6.4 Cut-away of a scroll compressor (courtesy of York/Johnson Controls)

Screw compressors

Screw compressors consist of a set of male and female helically grooved rotors and compression is achieved by direct volume reduction due to the rotation of the rotors. The gas is taken in at the inlet port and then compressed during the rotation of the rotors and finally discharged at the discharge port. The image of a typical screw compressor is shown in Figure 6.5.

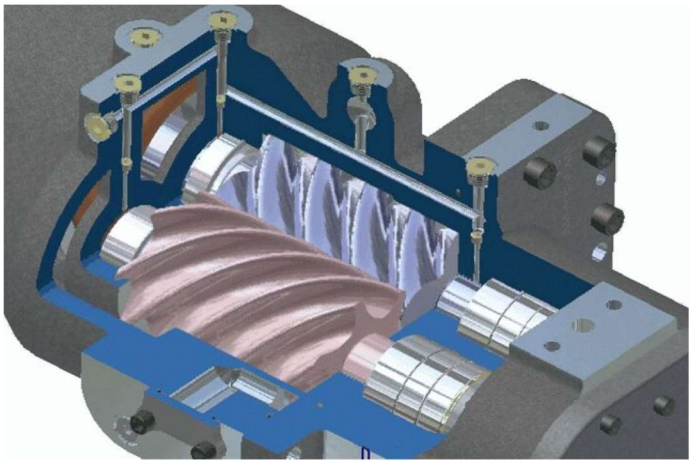

Figure 6.5 Cut-away of a screw compressor (courtesy of York/Johnson Controls)

Rotary sliding-vane compressors

Sliding-vane compressors consist of a rotor with slots and sliding vanes placed in them as shown in Figure 6.6. The rotor is eccentrically arranged within the housing, providing a crescent-shaped swept area between the intake and discharge ports. The rotor vanes are forced out from the slots up to the housing wall by centrifugal force during rotation.

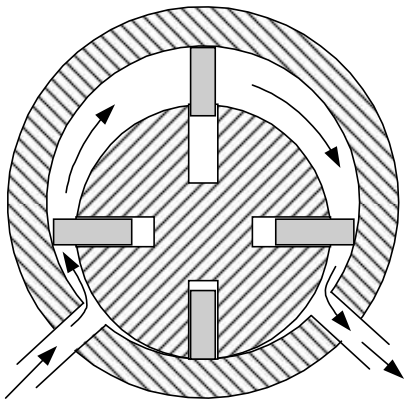

Figure 6.6 Cut-away of a rotary sliding-vane compressor

Gas enters through the intake port and gets trapped between two sliding vanes, the rotor and the housing. As the rotor turns, the volume occupied by the trapped gas reduces to a minimum where it is exhausted at the discharge port.

Centrifugal compressors

Centrifugal compressors consist of a single impeller or a number of impellers mounted on a shaft and rotating at high speed inside a housing. The gas to be compressed enters the impeller in the axial direction and is discharged radially at high velocity. The velocity pressure is then converted into static pressure in the diffuser. Since the part-load efficiency of centrifugal compressors is low, they are normally used for base-load applications. The image of a centrifugal compressor is shown in Figure 6.7.

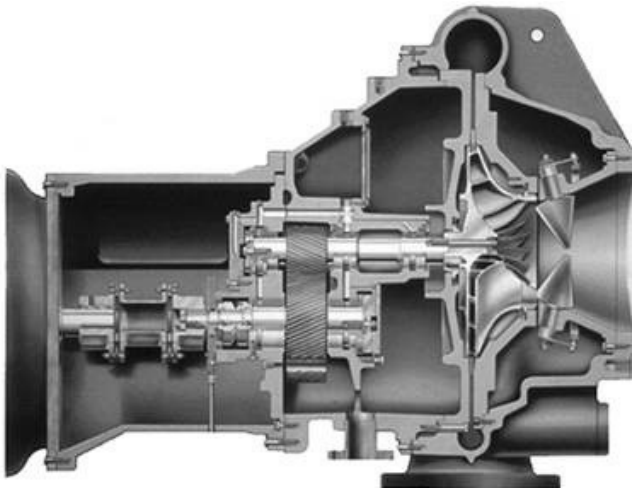

Figure 6.7 Cut-away of a centrifugal compressor (courtesy of York/Johnson Controls)

Axial-flow compressors

Axial-flow compressors consist of a number of rows of rotating aerofoil blades (rotors) and stationary blades (stators) placed axially as shown in Figure 6.8. The gas to be compressed passes parallel to the axis of rotation through each stage of rotors rotating at high speed where velocity pressure is imparted. This is later converted to static pressure by diffusion when passing through the stators.

Axial compressors are commonly used with gas turbines and in high volume flow industrial applications such as air separation plants and blast furnace air blowers.

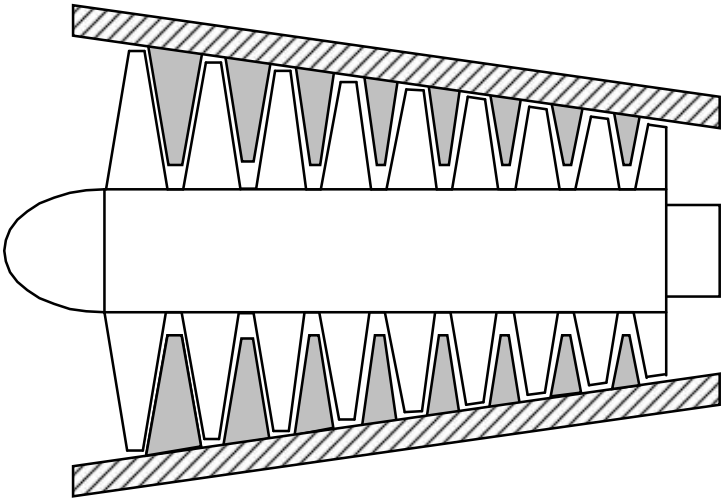

Figure 6.8 Cut-away of an axial-flow compressor

6.3 Compression process

As gas is compressed from a pressure P_1 to a higher pressure P_2, its volume reduces from V_1 to V_2. During compression, the temperature of the gas also increases.

The compression process follows the path

PV^n = constant (6.1)

As shown in Figure 6.9, the path of compression can be

- "isothermal," where the temperature is maintained constant (ideal case)
- "adiabatic," where heat is not allowed to flow in or out during the compression
- "polytropic," which is generally the case where heat exchange is allowed during compression but temperature is not maintained absolutely constant

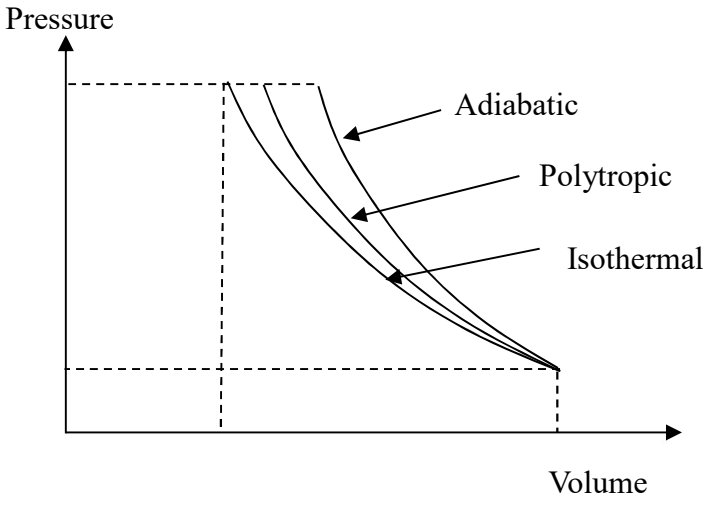

Figure 6.9 Various compression processes

In the expression PV^n = constant, the value of n is equal to 1 for isothermal, about 1.4 for adiabatic and between about 1.2 to 1.3 for polytropic.

Isothermal compression is the most efficient but is not practical to achieve, while adiabatic compression is the most inefficient.

The actual compression process normally involves four basic stages: intake stage (where gas enters the compression chamber), compression stage (where the gas gets compressed), discharge stage (where the compressed gas is discharged from the compressor), and expansion stage (where prior to the intake, the gas trapped inside the compression chamber expands).

A typical compression process is shown in Figure 6.10.

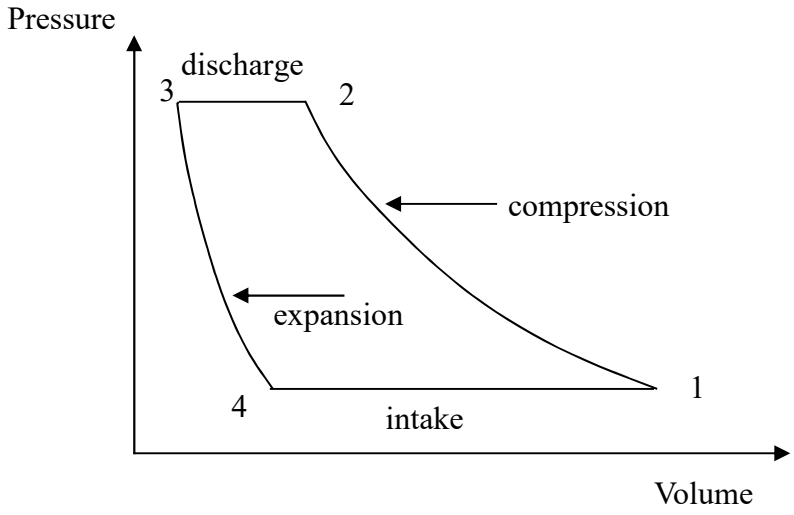

Figure 6.10 Typical compression process

The work done in compression (from 1 to 2), $W = \int V \, . \, dP$ (6.2)

The work done is represented by the area enclosed within the P-V diagram shown in Figure 6.11.

Using the relationship (6.1), the work done can be computed by performing the integration represented in equation (6.2) to provide the following two expressions for isothermal compression and polytropic or adiabatic compression:

$$\text{Isothermal, } W = mRT_1 \ln\left(\frac{P_2}{P_1}\right) \quad (6.3)$$

$$\text{Adiabatic and polytropic, } W = \frac{n}{n-1} mRT_1 \left[\left(\frac{P_2}{P_1}\right)^{\frac{n-1}{n}} - 1\right] \quad (6.4)$$

where

W = work done (J)

m = mass of air being compressed (kg)

R = specific gas constant for air (287 J/kg.K)

T_1 = absolute temperature of air at the compressor intake (K)

P_1 = absolute pressure of air at the suction of the compressor

P_2 = absolute pressure of air at the discharge of the compressor

n = value dependent on the type of compression process

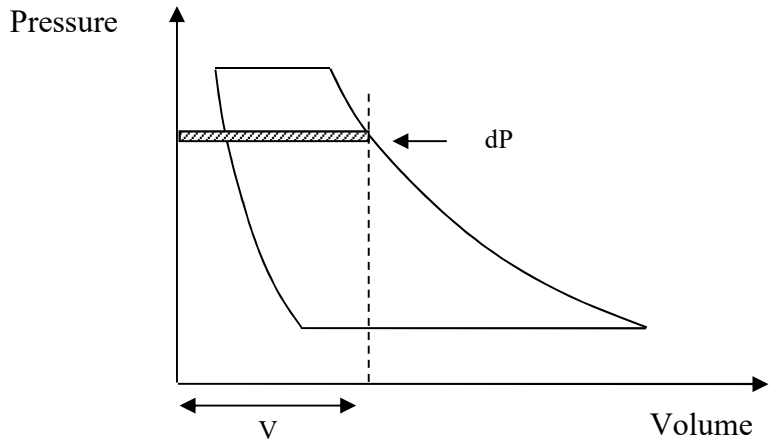

Figure 6.11 Work done in the compression process

6.4 Energy saving opportunities

From equation (6.4), it is evident that work done during compression is dependent on "m", the mass of gas being compressed, "T_1", the intake temperature of the gas and, "P_2/P_1", the compression ratio.

Therefore, energy saving opportunities in compressor systems generally involve reducing the mass of gas to be compressed, reducing the intake temperature and reducing the compression ratio.

Some of the common types of energy saving measures for compressor systems are described in the following sections of this chapter.

Reducing mass of gas to be compressed

Reducing system load

Reducing load on a compressor involves reducing usage of compressed gas so that the compressor has to compress less mass of gas.

In air conditioning systems, reducing the cooling load of a building involves measures such as, better insulation of the building envelope, reducing solar heat gain, reducing heat generation within the building by inefficient lighting and minimising air leakages through the building facade. All these measures result in the compressors of the building air-conditioning system (chillers) having to compress less refrigerant.

Similarly, in industrial refrigeration plant with freezers and chillers, good insulation, minimising air leakages through doors and setting of the temperature set-point to the maximum possible acceptable value for the application, result in lower refrigeration load and therefore, less refrigerant to be compressed.

Repairing leaks

In industrial gas compression systems, the gas is produced, stored, distributed and used at a much higher pressure than the surrounding air. Therefore, the compressed gas will leak through even the smallest openings, resulting in much energy wastage. In many compressed air systems, leaks account for about 20 to 30% of the total compressor output.

Common sources of leaks are pipe fittings, flexible tubes, couplings, pressure regulators, condensate traps and pipe joints. Therefore, an effective leak detection and repair program can yield significant energy savings.

Using alternative systems

Since the process of compression is very energy intensive, the use of compressed gases should be minimised where possible by adopting alternative systems. For example, in industrial plants that have central compressed air production and distribution systems, pneumatic tools are used for various applications because

compressed air is freely available. In such instances, use of alternative tools such electric drills and grinders can help to reduce the load on the compressors.

Use of refrigerant type dryers

Air contains moisture and when compressed, the same amount of moisture is then contained in a lower volume of air. This results in condensation which needs to be removed as it could otherwise damage equipment, cause corrosion and even affect the performance of systems.

The dryness of the air after the dryer is normally indicated as “dew point”, which is the temperature to which the air needs to be cooled before the moisture in the air condenses. Therefore, air at a low dew point needs to be cooled to a lower temperature before moisture can condense, indicating that the moisture content of the air is low.

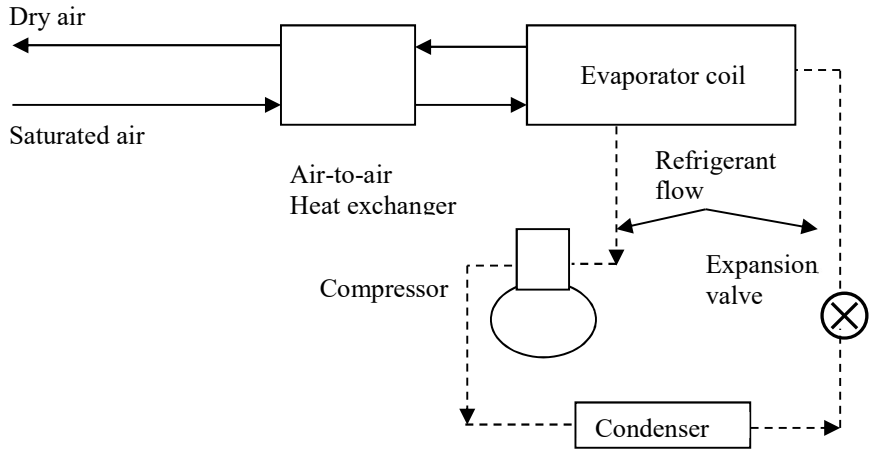

Figure 6.12 Refrigerant dryer

The two main types of dryers used are refrigerant type and desiccant type. Refrigerant dryers consist of an evaporator, condenser, compressor and an expansion device and work based on the vapour compression cycle (Figure 6.12). When compressed air passes over the evaporator coil, the air is cooled to its dew point resulting in condensation. An air-to-air heat exchanger is used to pre-cool the saturated air using the cool dry air after the evaporator.

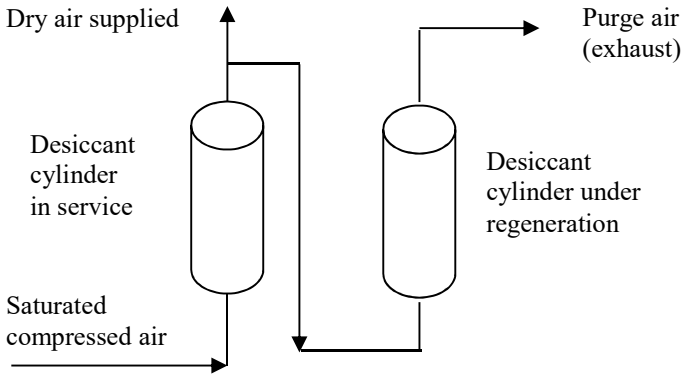

Figure 6.13 Arrangement of a purge type desiccant dryer

Refrigerant dryers can normally achieve dew point of about +2°C / 3°C and are sufficient for general applications. Refrigerant type dryers are much more energy efficient than desiccant type dryers (Figure 6.13), which use cylinders filled with desiccant to absorb moisture from the compressed air. The cylinders are operated alternately where one cylinder absorbs moisture while the other is being "regenerated" to remove the absorbed moisture. The regeneration process involves passing a portion of the compressed air (about 15 to 20% of the system output) to remove the moisture. Therefore, if a refrigerant type dryer or desiccant type dryer (which does not use purge air for regeneration) is used, the load on the air compressor can be reduced.

Reducing compression ratio

Compression ratio is the ratio of the discharge pressure to the suction pressure of the compressor. Since work done during compression depends on the compression ratio (equation (6.4)), the energy consumed by compressors can be reduced by lowering this ratio.

The compression ratio can be reduced by increasing the intake pressure of the gas and reducing its discharge pressure. The intake pressure can be increased by various means for different applications and a few examples are described below.

Increasing evaporator temperature

In refrigeration systems, the compressor inlet pressure is set to provide the required evaporator temperature. Since lower evaporator temperature requires a lower compressor suction pressure, compressor power consumption can be reduced by increasing the evaporator temperature set-point. Figure 6.14 illustrates on a pressure-

enthalpy (p-h) diagram the impact of increasing the suction pressure of a refrigeration compressor by increasing its evaporator temperature.

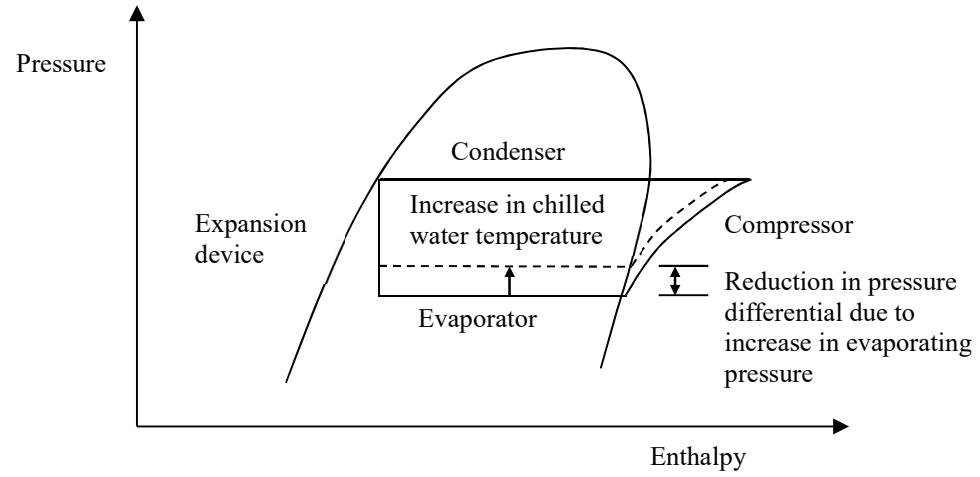

Figure 6.14 P-h diagram for a refrigeration compressor with increased evaporator temperature

Reducing throttling

Since the evaporator temperature in industrial refrigeration systems depends on the compressor suction pressure, in centralised systems, different evaporator temperatures are often achieved by throttling the refrigerant flow to evaporators which operate at a higher temperature (Figure 6.15).

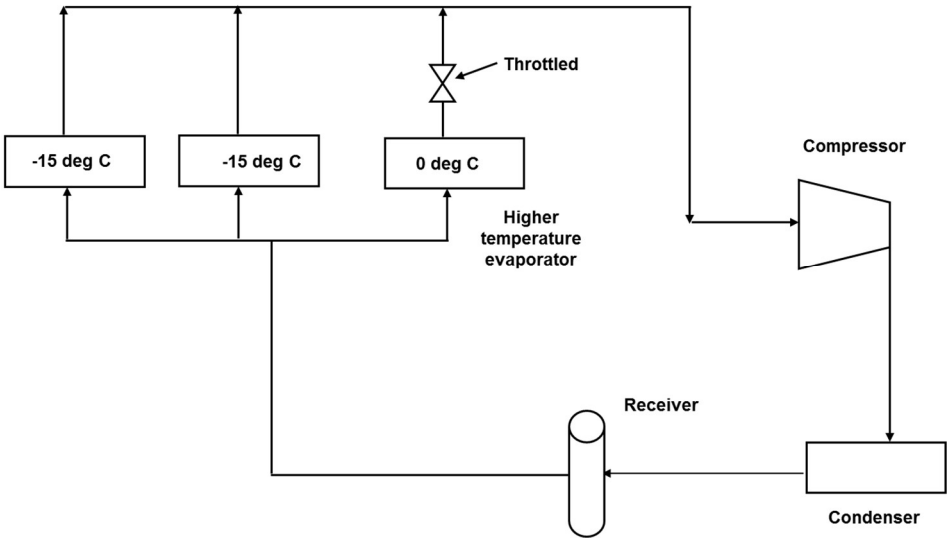

Figure 6.15 Arrangement of a single system serving multiple temperatures

This practice leads to higher energy consumption by the compressor motor as the refrigerant that needs to be supplied to the evaporator which operates at a relatively higher temperature has to be compressed by the same pressure ratio as the refrigerant supplied to the other evaporators operating at a much lower temperature.

In such a situation, if the capacity of the evaporator operating at the higher temperature is significant in relation to the total system refrigeration capacity, an independent refrigeration system can be installed for the particular evaporator, or a two-stage system used where only one stage is used for the evaporator operating at a higher temperature (Figure 6.16).

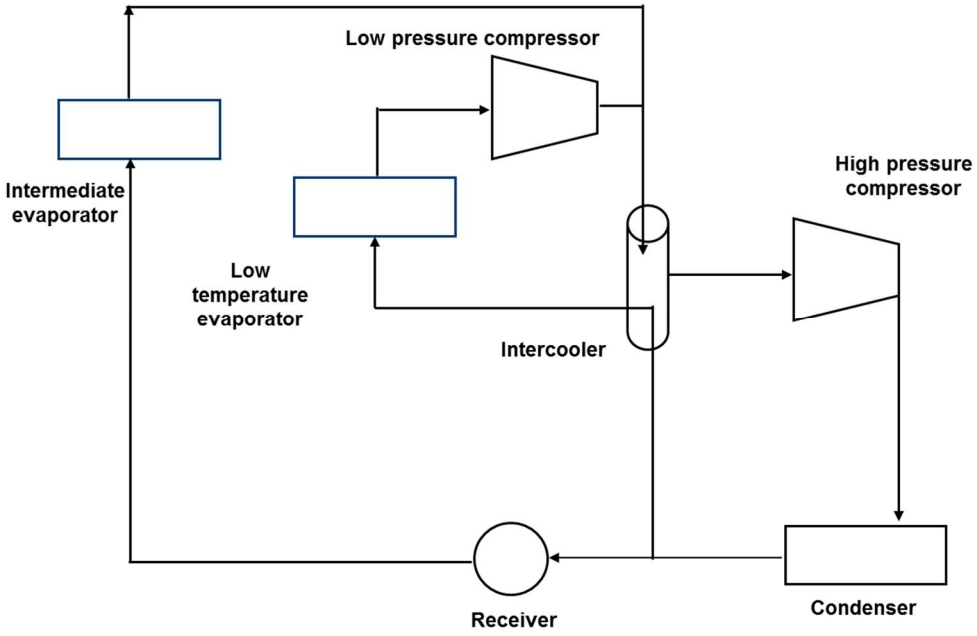

Figure 6.16 Two-stage system with evaporators operating at two temperatures

Similarly, the compressor discharge pressure can also be reduced by various means for different applications. A few examples are described below.

Reducing system operating pressure

The discharge pressure of compressors often depends on the operating system pressure requirements such as in compressed air systems.

The system pressure for compressed air systems, which is the pressure at which compressed air is supplied by the compressors depend on factors such as the

pressure requirements of the end users, pressure losses in the system, storage capacity and variation in demand.

To minimise energy consumption, system pressure should be set at a minimum value based on equipment requirements. Further, receivers should be sized adequately to meet intermittent high loads. In systems where a single user requires a very much higher pressure than the other users, standalone compressors should be used for the system that requires a higher pressure so that the system serving the other users can operate at a lower pressure.

Pressure losses in distribution systems could be minimised by reducing the use of fittings where possible, using fittings with lower losses or increasing pipe size (diameter).

Using water-cooled condensers

In air-cooled condensers, a single fan or a number of fans are used to blow ambient air through the condenser which is normally a finned heat exchanger. Water-cooled condensers on the other hand have shell and tube heat exchangers where the heat is rejected to the condenser water. This warm condenser water is then pumped to cooling towers where the heat is rejected to the environment. Heat transfer at the cooling towers takes place mainly by latent cooling where some of the warm condenser water evaporates absorbing the latent heat of evaporation from the condenser water, thereby cooling it.

Water-cooled systems operate at a lower condensing pressure than air-cooled systems. The lower condensing pressure is due to the rejection of heat to condenser water which is first cooled to a temperature a few degrees above the wet-bulb temperature of the ambient air (by the cooling towers). In air-cooled condensers, heat is directly rejected to the ambient air and the heat transfer is dependent on the dry-bulb temperature of the air. Further, the heat transfer in water-cooled shell and tube heat exchangers is better than in finned type air-cooled condensers.

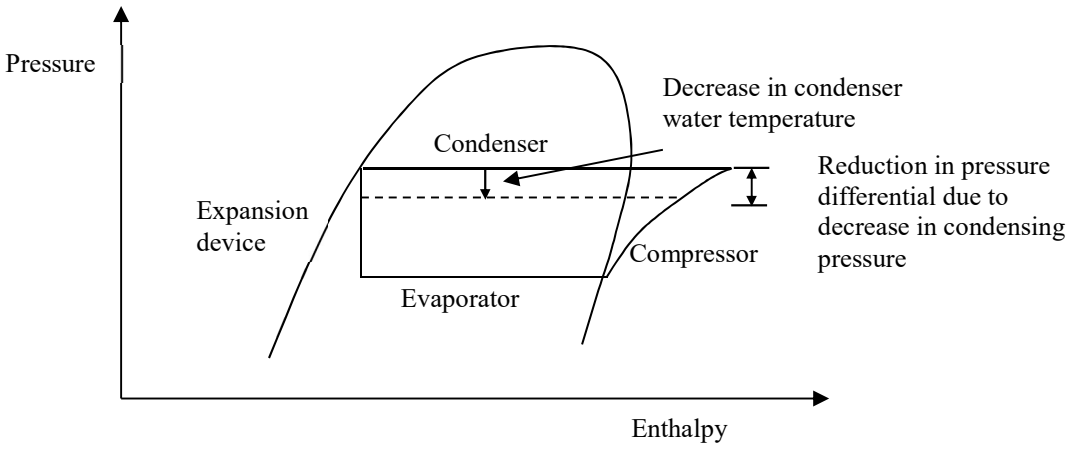

Figure 6.17 P-h diagram for a refrigeration compressor with decreased condenser temperature

Multi-stage systems

In high pressure applications, the compression can be divided into two or more stages where the gas is compressed to an intermediate pressure and cooled (intercooling) before entering the next stage of compression. This helps to reduce the volume of air to be compressed in the subsequent stage. As shown in the Pressure-Volume (PV) diagram for 2-stage compression in Figure 6.18, the work required is reduced as denoted by the shaded area.

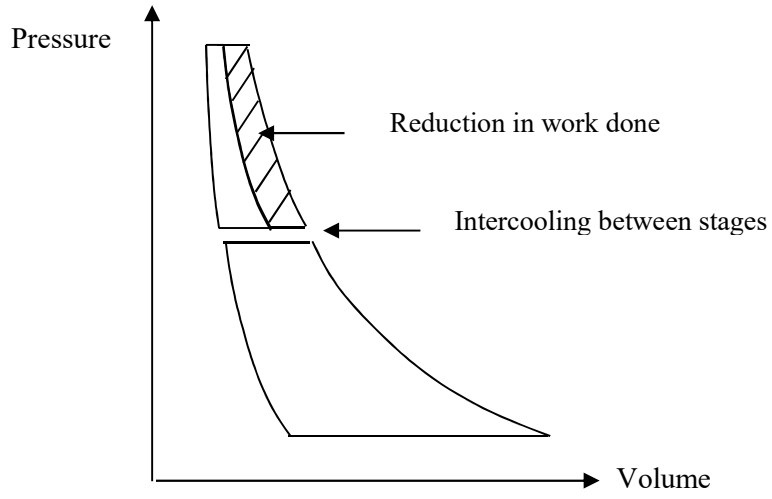

Figure 6.18 PV diagram for two stage compression

Intercooling can be by either water cooling or air cooling using heat exchangers. In perfect intercooling to maximise compression efficiency, the temperature of the gas at the intermediate stage is reduced to the intake temperature of the gas.

Reducing compressor intake temperature

Gases expand when heated and contract when cooled. Therefore, the volume of gas that needs to be compressed to produce a unit volume of gas at the required outlet conditions increase, when the inlet temperature of the gas being compressed is higher. Since higher volume of gas being compressed leads to higher compressor power, energy consumed by compressed air systems can be minimised by providing adequate ventilation for compressor rooms to lower the intake air temperature. Ventilation can be provided by natural means or by forced ventilation using fans and ducting systems.

Compressor controls

In addition to the energy saving measures relating to the mass of gas to be compressed and the compression ratio, the performance of compressors can also be optimised by using appropriate controls to better match capacity to the load.

For compressors using VSDs, the compressor capacity can be matched to the load by varying the compressor operating speed. Such controls are common for screw type compressors which are positive displacement type. The output of such a compressor is directly proportional to the operating speed. Since in compressor systems, the discharge pressure has to remain constant irrespective of the capacity, the power consumed by the compressor also reduces linearly with speed. Therefore, if the compressor output is reduced by 20%, the compressor power will also reduce by about 20%.

Summary

This chapter provided an introduction to compressors and gas compression systems. Various types of compressors and their operating principles were also described. Thereafter, various energy saving measures applicable for compressors and gas compression systems were presented.

References

1. Atlas Copco, Product Brochure for Rotary Screw Compressors, Atlas Copco
2. Improving Compressed Air System Performance: A source book for industry, Compressed Air Challenge and US Department of Energy, 2003.
3. Jayamaha, Lal, Energy-Efficient Industrial Systems, Evaluation and Implementation, McGraw-Hill, New York, 2016.
4. Kaeser Kompressoren, Designing Your Compressed Air System, Kaeser Kompressoren.
5. Kaeser Kompressoren, Energy Savings In Compressed Air Systems, Kaeser Kompressoren.

7.0 VERTICAL TRANSPORTATION SYSTEMS

Vertical transportation systems include passenger lifts (also called elevators), service lifts, freight lifts and escalators. A well designed vertical transportation system is one of the key requirements of a modern multi-storey building.

The ideal performance of an elevator system should provide minimum waiting time for a car at any floor level, comfortable acceleration, rapid transportation, smooth and rapid retardation, accurate automatic levelling at landings and rapid loading and unloading at all stops. In this chapter, the important aspects of a modern vertical transportation system together with some key energy saving opportunities are presented.

Learning Outcomes:

The main learning outcomes from this chapter are to understand:

1. Introduction to vertical transportation systems
2. Types of lifts (traction vs hydraulic lifts)
3. Motors and type of drives
4. Geared and gearless machines
5. Regenerative lifts

7.1 Introduction to lifts

Lifts can account for a significant portion of the electrical energy consumption in high-rise commercial buildings. In air-conditioned buildings, lifts can account for up to 5% of the total consumption. The two main types of lifts used are, hydraulic lifts which have hydraulic systems to provide the movement and traction lifts which use wire ropes pulled over sheaves driven by a motor.

Hydraulic lifts mainly consist of a piston, cylinder and a hydraulic pump. The hydraulic pump driven by a motor forces the hydraulic fluid into the cylinder which moves the piston upwards. When the lift descends, the potential energy is dissipated as heat.

The two types of driving systems used for rope-type elevators are the drum method (winding-drum type elevator) and traction method (traction type elevator). Winding drum elevators are an older type of elevator where the elevator car is pulled by means of steel ropes attached to a drum, that wind around the drum. The weight of the lift car is balanced by a counterweight. In some cases, there are 2 counterweights, where

one is attached to the car, and the other is attached to the winding drum. This type of elevator is not allowed for commercial use due to safety limitations (if the final limit switch fails, the elevator will keep moving, even when it reaches the top of the shaft).

Traction lifts operate using wire ropes that are pulled by a motor drive. In some traction lift drives, the motor drive is through a reduction gear system while others are “gearless”. They also have counterweights linked to the lift car by a pulley system so that the counterweight lowers when the lift car rises and vice versa. This helps to reduce the weight to be lifted.

In lifts, energy is primarily consumed by the lift motor, brake system, lights and ventilation fans. The lift motor generally consumes the greatest amount of energy. The energy consumed by the motor is used to provide the work done to move the lift up or down, overcome friction losses when moving and dynamic losses when starting and stopping.

The counterweight of lifts is designed to equal the weight of the lift car and about half the maximum design load. Therefore, the lift motor requires to do work only if the load being carried is more than half the maximum design load when moving upwards, and when the load is less than half the maximum design load when moving downwards. Therefore, under other operating modes, the lift drive works in regeneration mode where the potential energy has to be dissipated. More on the regenerative lift operation is explained in section 7.4.

The electrical energy consumption of lifts depends on factors such as the type of motor drive used, the number of starts (door openings), carrying capacity, building height and building occupancy. A typical power consumption characteristic for lifts (without regeneration) is shown in Figure 7.1. The total energy consumption for the lift is represented by the area under the line. Data available from studies of lifts used in mid- and high-rise buildings indicate that average consumption of lifts range from about 5 to 40 kWh/day per lift.

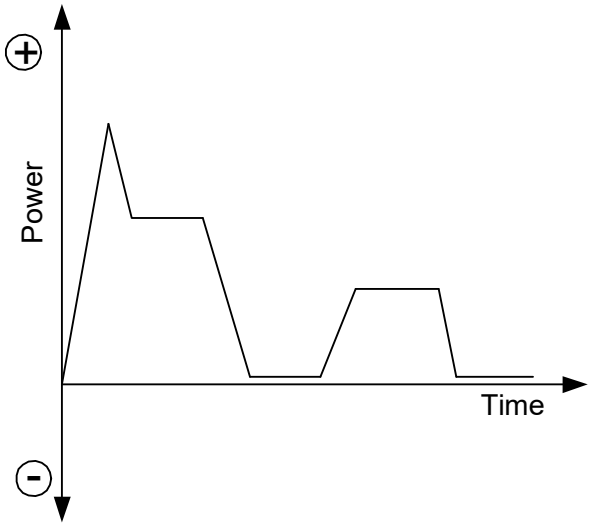

Figure 7.1 Typical power consumption characteristic without regeneration

7.2 Types of lift (traction vs hydraulic lifts)

Hydraulic lifts are sometimes used for low-rise buildings due to their lower cost. However, they are less efficient than traction lifts and consume about 3 times the amount of energy consumed by traction lifts for the same applications.

Some of the reasons for lower efficiency of hydraulic lifts are:

- Losses in the hydraulic system including the pump, valve unit and transmission
- Losses in the motor
- Absence of a counterweight to offset part of the potential energy required to move the lift
- Loss of energy due to heat dissipation in the hydraulic fluid

Therefore, for new installations in low-rise buildings and when replacing hydraulic lifts, traction lifts should be considered instead of hydraulic ones.

7.3 Motors and types of drive

DC motors, AC induction motors and AC synchronous motors are used for driving traction lifts. DC motors have good starting torque and good torque stability at low speeds. However, they have higher losses due to the use of a DC generator as shown in Figure 7.2. Electrical energy from the AC supply has to be converted to mechanical

energy which is later converted back to electrical energy in the generator before being supplied to the DC motor.

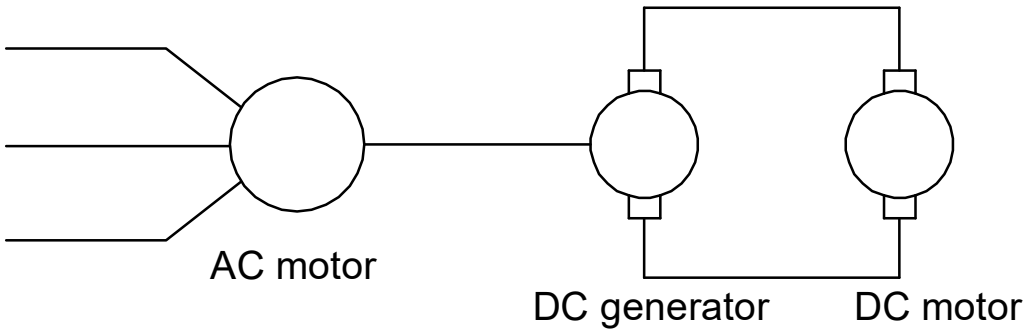

Figure 7.2 Arrangement of DC motor drives

Another type of drive used is the AC 2 which utilises 2-speed AC motors with two sets of windings. In such drives, a buffer resistance or a choke is used for smooth deceleration. This results in higher losses during start-up and deceleration. In addition, 2-speed systems have a flywheel to provide smooth transition in speed and torque. The flywheel stores energy which is later dissipated leading to higher losses.

To overcome losses associated with DC generator motor drives and AC 2 drives, AC drives that use solid state variable voltage (VV) and variable frequency (VF) controls have been developed. A comparison in power consumption between a DC drive and a VVVF drive is illustrated in Figure 7.3. The energy consumed by the drive is represented by the area under the curve and as the figure indicates, the energy consumed by DC drives is much higher than that for ACVVVF drives. Typically, ACVV and ACVVVF drives consume 30% and 50% less energy than conventional drives respectively.

7.4 Regeneration

As explained earlier, traction lifts have counterweights that weigh about the equivalent of the weight of the lift car and half of its maximum load to help reduce the weight to be lifted by the lift motor. Therefore, an empty lift needs energy to descend (to overcome the counter weight) while a full lift needs energy to ascend.

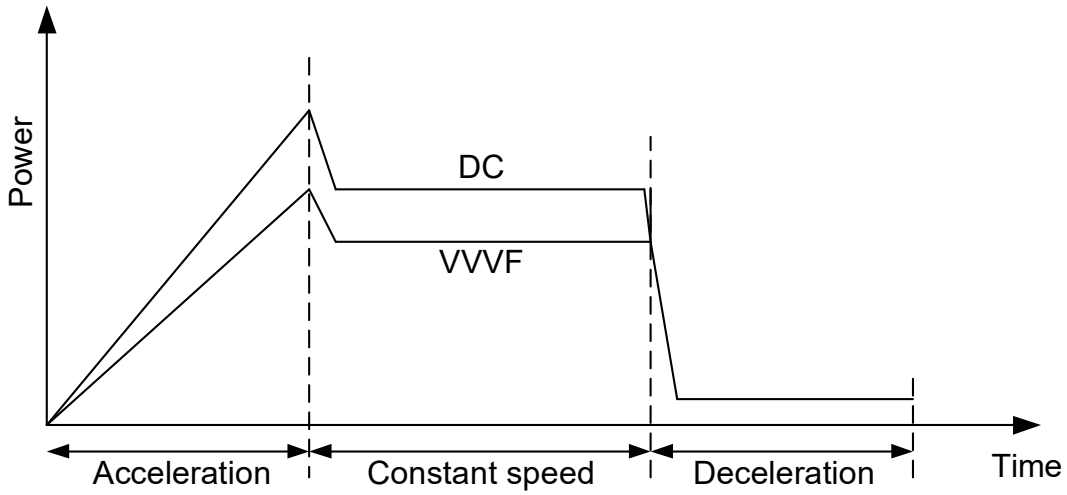

Figure 7.3 Comparison between DC and ACVVVF drives

Similarly, an empty lift ascending or a full lift descending has potential energy that needs to be dissipated. In older lifts, this potential energy is dissipated in the form of heat in resistor banks. However, newer lifts are able to feed this regenerative power back into the building electricity distribution system which helps to reduce the amount of electricity drawn from the grid.

A typical power consumption characteristic for a lift with regeneration is shown in Figure 7.4. The net energy consumption is the difference in the area above and below the horizontal axis. The amount of energy savings that can be achieved with regenerative systems depends on many factors but, typically, they are able to save as much as 30% compared to a geared traction system. During regeneration, all the available energy cannot be recovered due to reasons such as copper and iron losses in the motor, friction losses in the system and losses in the gear reducer.

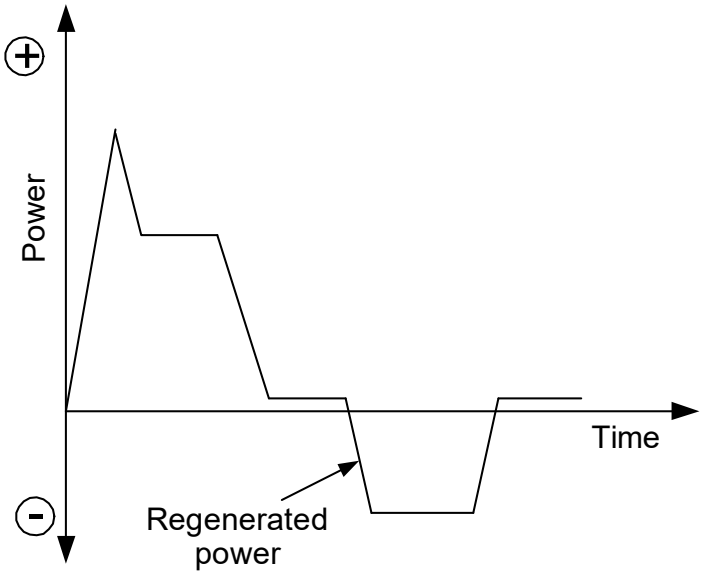

Figure 7.4 Typical power consumption characteristic with regeneration

Energy savings from lifts with regeneration

As explained earlier, the regenerated power is dissipated as heat in conventional machines. However, in newer designs, when a lift travels downwards with a heavy load or upwards with a light load, the regenerated energy from the traction machine is fed back to the building electrical system. Such regenerative lifts are a common feature in new buildings. Typically, the amount of energy regenerated is up to 30% of the energy consumed by the lifts.

Traction machines can be retrofitted with a regenerative braking module for geared and gearless traction drives. However, the add-on regenerative braking module can only be added on the Variable Frequency (VF) drives to serve as the regenerative braking function. The regenerative braking module is connected in parallel with the rectifier of the motor drive (between the DC bus and AC supply) as shown in Figure 7.5.

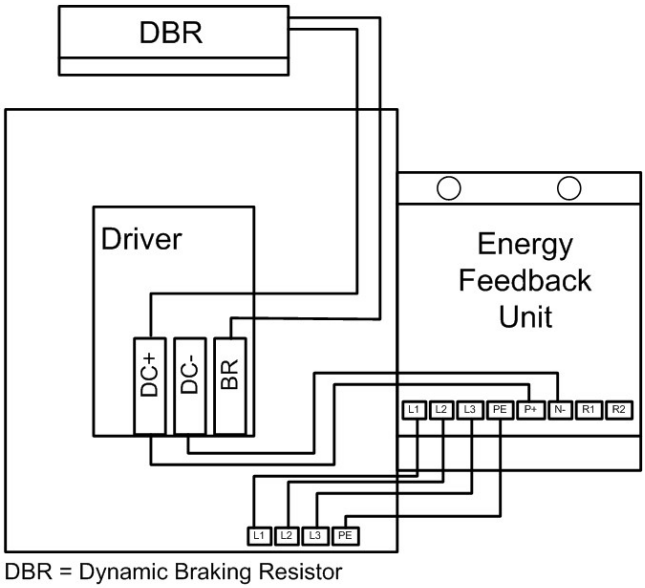

Figure 7.5 A typical regenerative braking module

The amount of energy savings that can be achieved from regeneration depends on various operating factors and parameters such as the design capacity, travelling speed, loading profile and travel distance. Data from a study on the energy performance of passenger lifts with rated capacity of 1,600 kg at different rated speeds is summarised in Table 7.1.

Lift Speed (m/s)	Energy Consumed or Regenerated	Energy consumption of the lifts over 4 months	% of energy savings
6	Consumed	46,000	26%
	Regenerated	16,000	
5	Consumed	29,000	22%
	Regenerated	8,000	
3.5	Consumed	16,200	26%
	Regenerated	5,800	
3	Consumed	9,400	23%
	Regenerated	2,800	
2.5	Consumed	24,600	19%
	Regenerated	5,700	

Table 7.1 Energy savings from regeneration

From the data shown in Table 7.1, it is evident that lifts with regenerative feature were able to achieve energy savings of between 20% to 25%.

7.5 Gearless systems

Motor drives can be either geared where a gear reducer is used between the motor and the sheave wheel (pulley) or gearless. Geared drives have losses due to friction and they are less efficient than gearless drives. However, for low speed lifts, due to the need for reducing the motor speed to the required sheave speed, worm type gear reducers are used. An image of a geared drive is shown in Figure 7.6.

Gearless systems are more efficient than geared systems and should be used where possible. If geared drives need to be used, more efficient gear reducers such as helical gear reducers should be used.

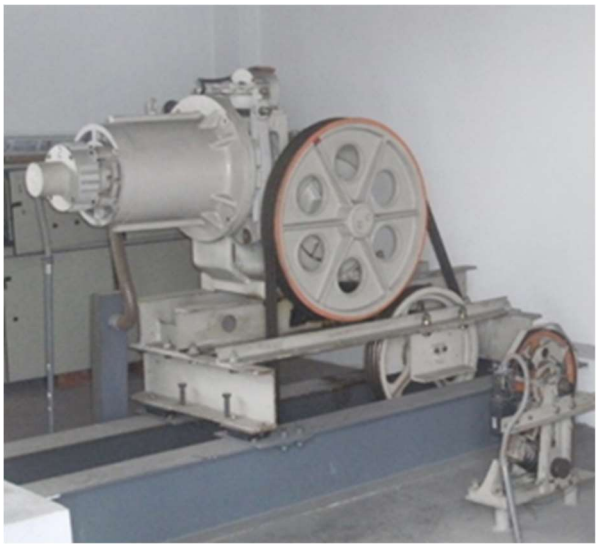

Figure 7.6 Arrangement of a geared drive

The gear reduction offers the advantage of requiring a smaller motor (lower power rating) to turn the sheave and operate the lift. In geared drives, gear oil is used to lubricate the worm gears and oil leakage can take place from worn-off gaskets and oil seals.



Figure 7.7 Arrangement of a gearless drive

In a gearless machine, the traction sheave is connected directly to the shaft of the electric motor. The motor rotation (speed) is transmitted directly to the traction sheave without any intermediate gearing. An image of a gearless drive is shown in Figure 7.7.

Some of the advantages of gearless drives are listed below:

- Compact due to use of Permanent Magnet (PM) synchronous motors
- Lower power consumption (no gear losses)
- No oil leakage
- Fewer moving parts leading to reduced mechanical wear and tear
- Reduced floor to floor travel time
- Less vibration and noise

Replacement of geared drives with gearless drives

If the existing roping system is a 1:1 arrangement (Figure 7.8), maintaining the same 1:1 roping system with a new gearless machine will not require modification work on the car structure and the counterweight frame.

However, if it is converted to a 2:1 roping system (Figure 7.9) to make use of the mechanical advantage, the motor required will be smaller due to the lower power consumption.

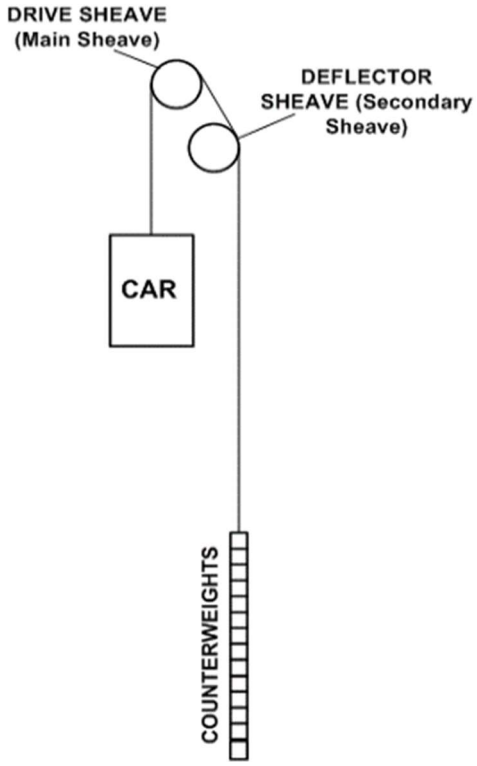

Figure 7.8 Arrangement with 1:1 roping

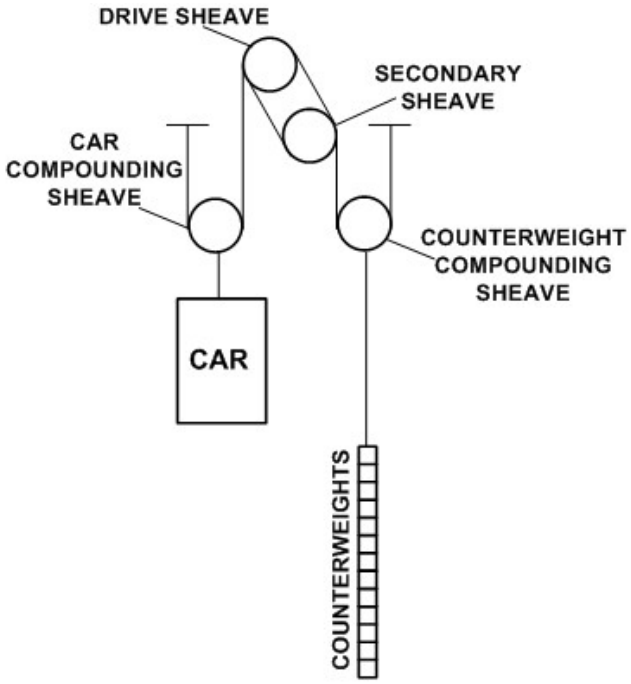

Figure 7.9 Arrangement with 2:1 roping

Converting an existing 1:1 roping installation to a 2:1 roping arrangement will require on-site modifications to the car structure and counterweight frame. This is because a

new sheave has to be added at the top of the car crosshead and another new sheave has to be added at the top of the counterweight frame. Cutting, welding and drilling of holes for bolts and nuts to secure the sheaves to the car and counterweight structure will be required. New or additional holes also have to be bored at the lift motor room floor slab for the ropes to pass through if 2:1 roping system is adopted.

7.6 Sizing

The energy efficiency of a lift also depends on how well its capacity matches the demand requirements. If the lift is oversized for its duty, higher losses will occur in the motor and drive system due to part-load operation. In addition, more energy will be consumed by the lift motor to move the counterweight up and down if the lift capacity is much higher than required.

In some buildings due to reasons such as changes in occupancy, the capacity of lifts can be much higher than necessary. For example, if a building initially designed for industrial use with lifts of capacity 10 Tons each is if converted for normal office use, the capacity of the lifts need to be only about 1 Ton each. In such a situation, the lifts can result in much energy wastage due to the need for moving a lift car which is much larger (heavier) than required and the need to overcome the extra weight of the counterweight designed for the original 10 Ton capacity.

Energy savings can be achieved in such cases by replacing the lift with a smaller capacity one or by reducing the counterweight (and capacity of the lift).

7.7 Controls

Modern lift control systems can range from simple programmes to schedule the turning on or off of all or some lifts during low usage periods to sophisticated systems which can “learn” from operations to position at specific locations based on usage patterns at different times of the day. Such controls help to reduce waiting time for users and the distance travelled by lifts (to reduce energy consumption). Some sophisticated systems are even able to use control algorithms to optimise energy usage by considering the potential energy available from the counterweights of the different lifts based on their location. The savings achievable by using advanced control systems is estimated to be about 5%.

7.8 Escalators

Unlike lift motors, escalator motors operate all the time irrespective of whether anyone is using the escalator. Therefore, energy consumed by escalators can be significantly reduced by using demand-based controls to slow down or completely stop them when not required.

Another common energy saving measure for escalators is to install power optimisation devices which detect low loading and reduce voltage to reduce losses in the motor. Power optimisation devices usually sense loading of the escalator by monitoring the phase angle between the current and voltage and reduce the voltage at low loading. Lowering the operating voltage reduces iron losses in the motor and improves the power factor which in turn reduces resistance losses in the motor.

Although suppliers of such power optimisers often claim that their devices can reduce the energy consumption of escalators by about 20%, one should keep in mind that often the actual power drawn by escalator motors is much less than the rated values and therefore, the savings achieved will be 20% of the actual consumption which can be quite small.

Summary

This chapter provided an introduction to vertical transportation systems and described the different types of lifts and motor drives used. Thereafter, various energy saving measures such as using regenerative drives, conversion of geared to gearless drives and change of 1:1 roping to 2:1 arrangement were presented.

References

1. George R. Strakosch, Robert S. Caporale, The Vertical Transportation Handbook, 4th edition, Wiley Publishers, 2010.
2 Guidelines on Energy Efficiency of Lift and Escalator Installations, Electrical and Mechanical Services Department, The Government of the Hong Kong Special Administrative Region, 2000.
3. Jayamaha, Lal, Energy-Efficient Building Systems, Green Strategies for Operation and Maintenance, McGraw-Hill, 2006.
4. Richard R. Janis, William K.Y. Tao, Mechanical and electrical systems in buildings, 4th edition, Pearson Prentice Hall, 2009.
5. Theraja, B.L, Fundamentals of Electrical Engineering and Electronics, 1st edition: S. Chand and Company Ltd, 2006.

8.0 VARIABLE SPEED DRIVES

8.1 Introduction

Motor driven systems are generally designed to operate at maximum load conditions. However, most systems operate at their full load capacity only for short periods of time. This often results in many systems operating inefficiently for long periods.

As explained in the earlier chapters of this reference manual, the efficiency of many systems can be improved by varying their capacity to match actual load requirements. Most commonly encountered systems are with variable torque (most pumps and fans), and the power required to operate the system varies to the cube (third power) of the speed. Therefore, large power reductions result from small reductions in speed. The most common method for modulating the speed of motors driving pumps and fans is by using variable speed drives (VSDs), sometimes called variable frequency drives (VFDs) or inverters (in this reference manual, the acronym VSD is used to describe such devices). An image of a typical VSD is shown in Figure 8.1.

This chapter describes the main components of VSDs and their functions, key operating principles of VSDs, common applications and selection criteria.

Learning Outcomes:

The main learning outcomes from this chapter are to understand:

1. The key operating principles of VSDs
2. Common applications of VSDs
3. Typical selection criteria



Figure 8.1 A typical variable speed drive unit (Danfoss VLT HVAC drive, courtesy of Danfoss)

8.2 Components of a VSD

The most commonly used type of motor is the three-phase, asynchronous AC motor, which is both inexpensive and of very reliable construction. Ordinary asynchronous AC motors are designed to make the operating speed dependent on the frequency and the voltage supplied to the motor.

As explained earlier in section 2.1, the speed of motors depends on the number of poles and frequency of the power supply where:

Synchronous speed (rpm) = (120 x power supply frequency in Hz) / (number of poles in the motor)

Therefore, for a motor with a fixed number of poles, the speed can be varied by changing the frequency of the power supply.

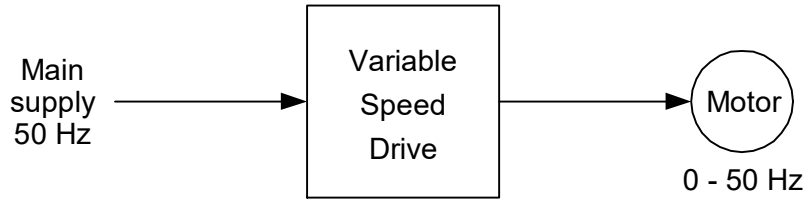

Figure 8.2 Operation of a variable speed drive unit

A VSD is an electronic unit that provides variable control of the speed of three-phase AC motors by varying the frequency of the power supply to the motor (Figure 8.2).

The configuration of a typical VSD is shown in Figure 8.3. The main components of a VSD are the rectifier, inverter, intermediate circuit and control circuit. It has no moving parts and uses a rectifier to convert the incoming AC supply to DC, which is then passed through an inverter to generate a AC supply with a different frequency.

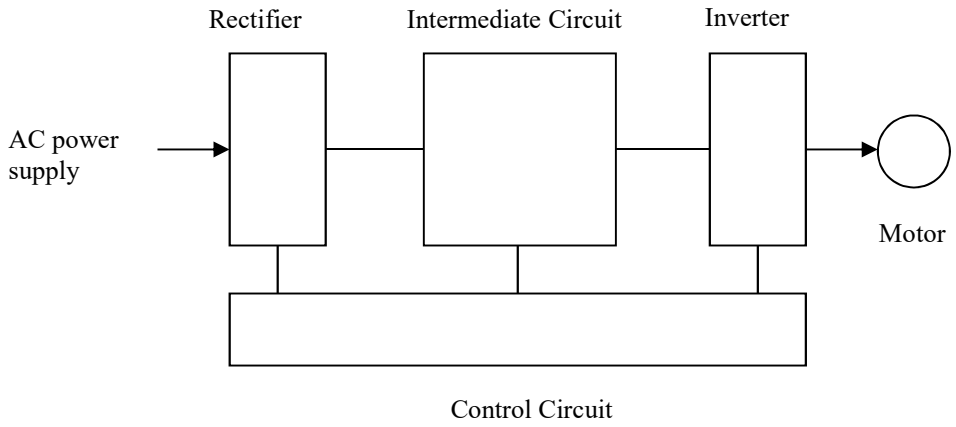

Figure 8.3 Configuration of a typical VSD

The main functions of each component are listed below.

Rectifier

Converts the AC (alternating current) to DC (direct current). It can consist either of diodes, thyristors or a combination of both. A rectifier using diodes is uncontrolled while a rectifier using thyristors is controlled. If both diodes and thyristors are used, the rectifier is semi-controlled.

Uncontrolled rectifiers

Diodes allow current to flow only in one direction (from the anode to the cathode). An AC voltage supplied to a diode is converted to a pulsating DC voltage. The current strength cannot be controlled and hence it is classified as an uncontrolled rectifier.

The configuration of a three-phase rectifier is shown in Figure 8.4.

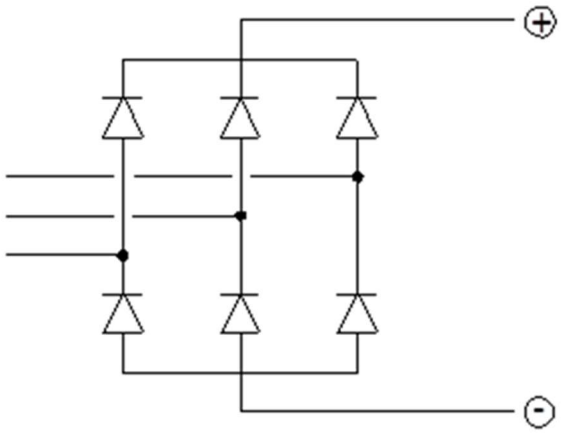

Figure 8.4 Configuration of a three-phase rectifier

The input and output wave forms for the above rectifier are shown in Figure 8.5.

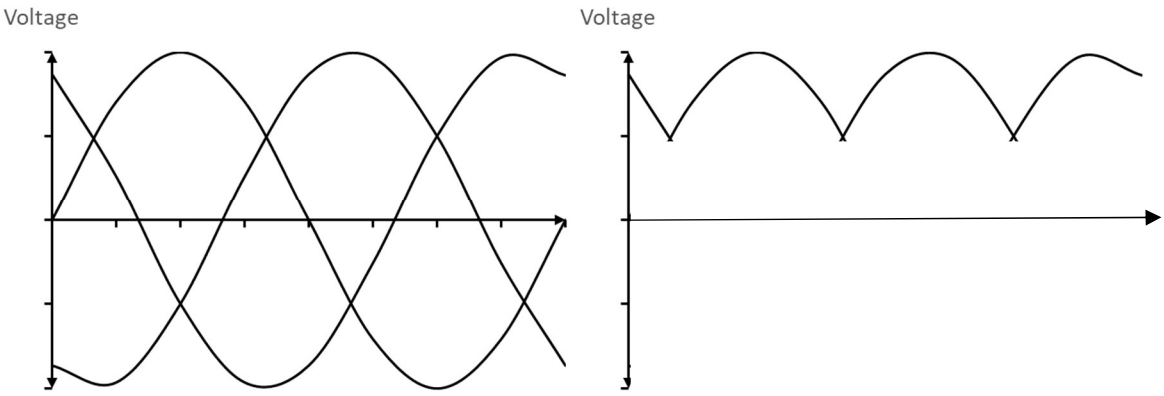

Figure 8.5 Wave form for an uncontrolled rectifier

Controlled rectifier

In a controlled rectifier, diodes are replaced with thyristors. They are similar to diodes and allow current to only flow in one direction, from the anode to the cathode, but they have an additional terminal “Gate”. This gate is controlled by a signal α which is the time delay (in degrees) before the thyristor conducts. The degree value indicates the delay between the voltage zero crossing and the time when the thyristor starts conducting. Once the current flows, the thyristor conducts the current until it reaches zero.

When the value of α is between 0^0 and 90^0, the thyristor is acting as a rectifier and when it is between 90^0 and 360^0, the thyristor is acting as an inverter. The output voltage of a controlled three-phase rectifier is shown in Figure 8.6.

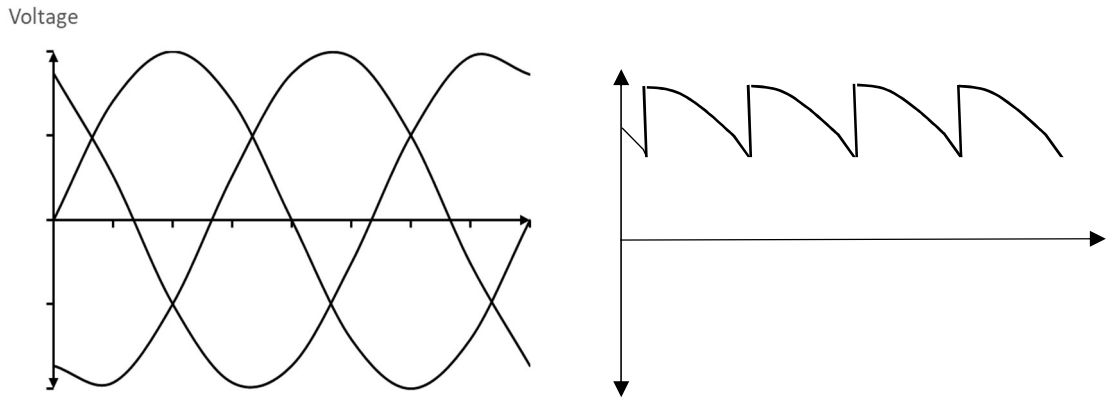

Figure 8.6 Output voltage for a controlled rectifier

Intermediate circuit

The intermediate circuit, sometimes called DC bus or DC link, stabilizes or smoothens the pulsating DC voltage and reduces the harmonics to the supply.

There are three basic types of intermediate circuits that are used, depending on the type of rectifier and inverter.

Variable DC intermediate circuit

In a current-source inverter (CSI), the intermediate circuit consists of an inductor coil as shown in Figure 8.7. It is used in combination with a controlled rectifier and transforms the variable voltage from the rectifier into a variable direct current. The input and output wave forms are shown in Figure 8.8.

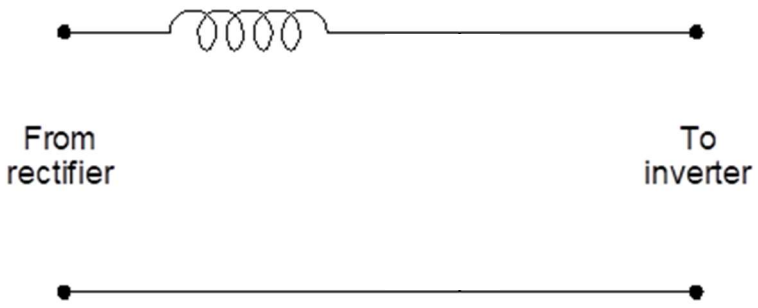

Figure 8.7 Variable DC intermediate circuit

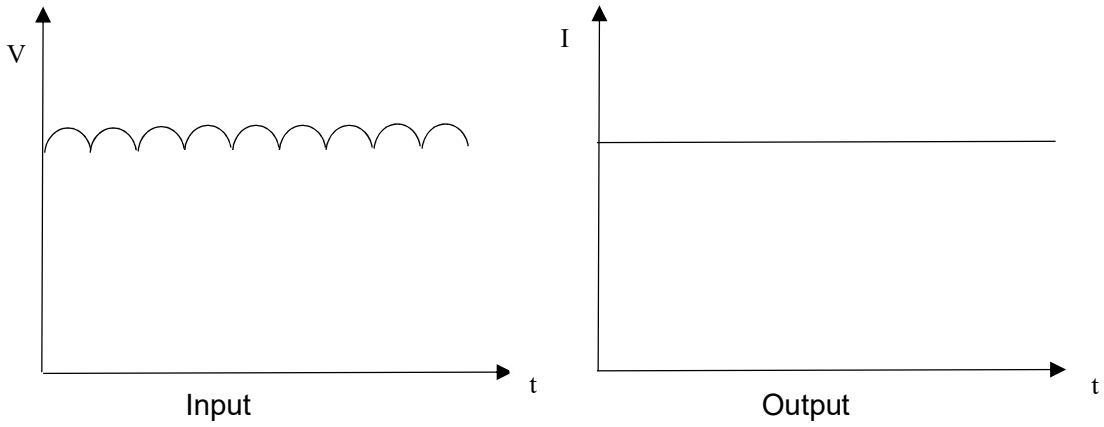

Figure 8.8 Input and output for a variable DC intermediate circuit

Constant DC voltage intermediate circuit

In a voltage source inverter (VSI), the circuit mainly consists of an inductor and capacitor as shown in Figure 8.9. It can be used with both types of rectifiers. The filter smoothens the pulsating DC voltage from the rectifier.

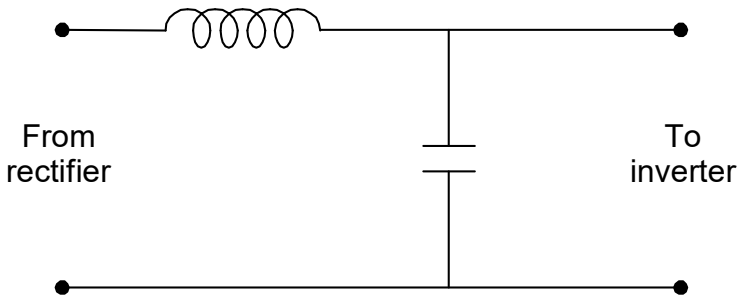

Figure 8.9 Constant DC voltage intermediate circuit

The input and output voltage for the above intermediate circuit is shown in Figure 8.10.

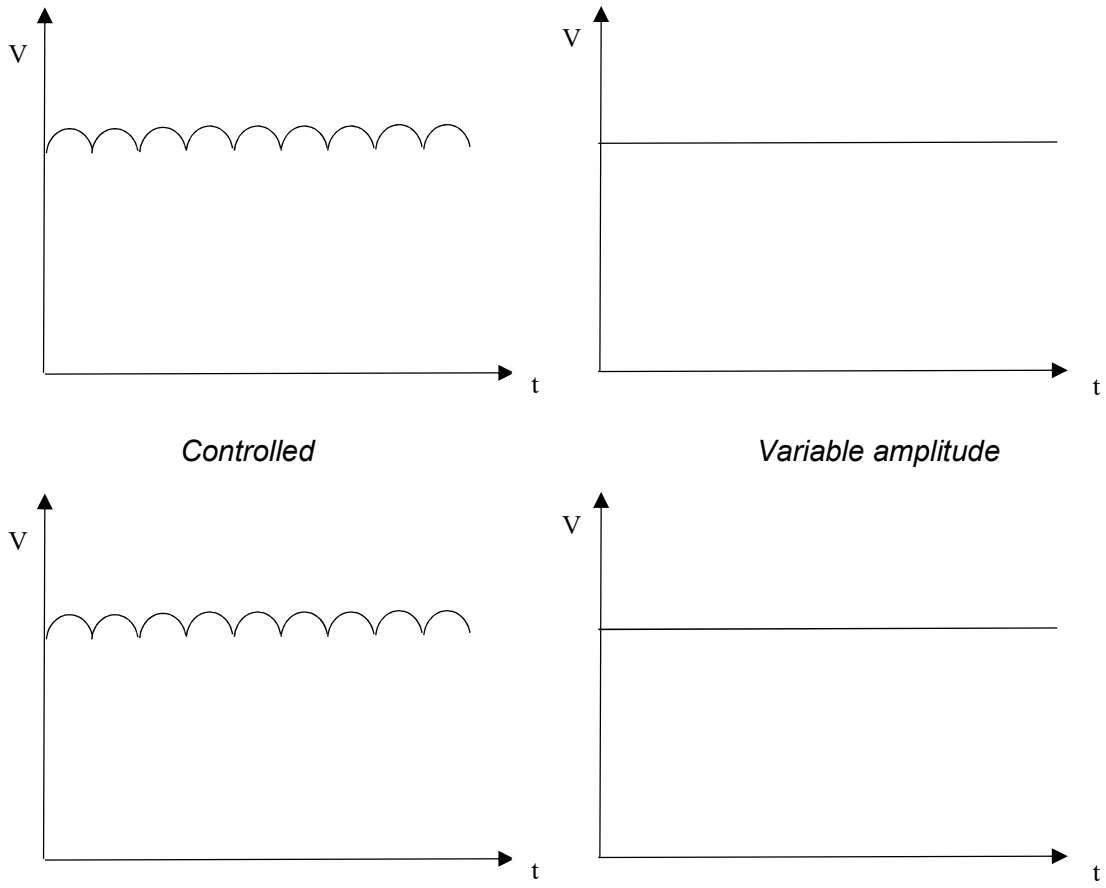

Figure 8.10 Input and output voltage for constant DC voltage intermediate circuit

Variable DC voltage intermediate circuit

In this design of the intermediate circuit, a chopper is inserted before the filter as shown in Figure 8.11. The chopper has a transistor which acts as a switch to turn the rectified voltage on and off. The control circuit regulates the chopper by comparing the variable voltage after the filter with the input signal. If there is a difference, the ratio is regulated by the time during which the transistor is conducting and the time when it blocks.

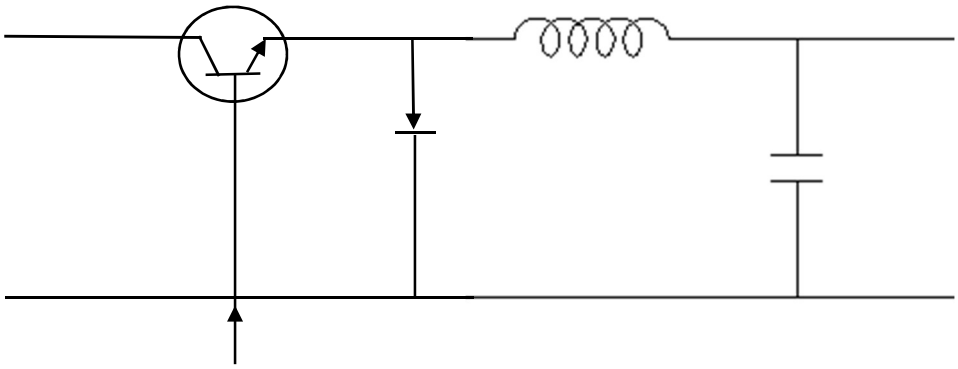

Figure 8.11 Variable voltage intermediate circuit

The filter of the intermediate circuit smoothens the square wave voltage after the chopper. The filter capacitor and coil keep the voltage constant at a given frequency. The input and output voltage for a variable voltage intermediate circuit is shown in Figure 8.12.

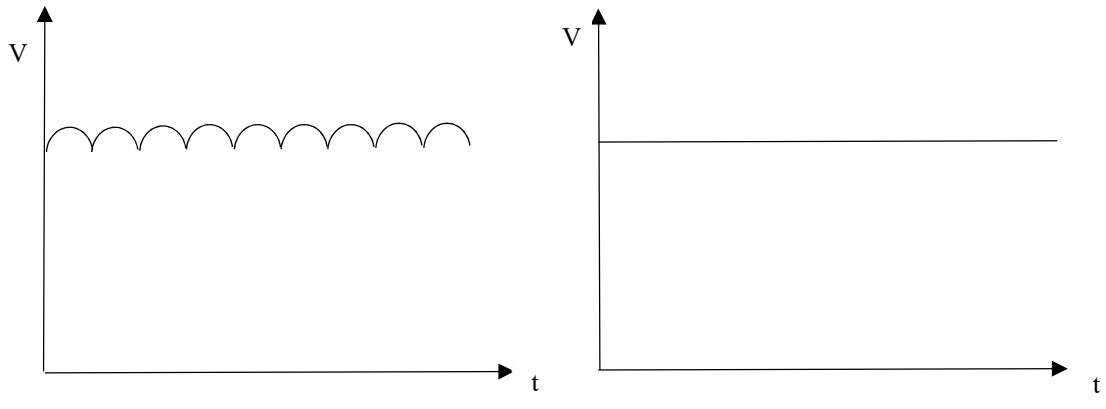

Input Output

Figure 8.12 Input and output voltage for a variable voltage intermediate circuit

CSI	VSI
Fed with adjustable current from a DC voltage source of high impedance	Fed from a DC voltage source with negligible impedance
Input current is constant (but can be adjusted)	Input voltage is maintained constant
Amplitude of output current is independent of load	Output voltage is not load dependent
Output voltage waveform and magnitude is dependent on load impedance	The waveform of load current is dependent on load impedance
Does not require feedback diodes	Requires feedback diodes

Table 8.1 Comparison of CSI and VSI

Inverter

The inverter is the last component in the frequency converter. From the intermediate circuit, it receives one of the following:

- Variable direct current
- Variable DC voltage
- Constant DC voltage

There are many types of inverters which work in different ways but their basic structure is similar. They mainly consist of semi-conductors that are switched on and off by a signal generated by a control circuit.

The configuration of a traditional inverter that works with a variable current intermediate circuit is shown in Figure 8.13. It consists of six diodes, six thyristors and six capacitors. The input and output are shown in Figure 8.14.

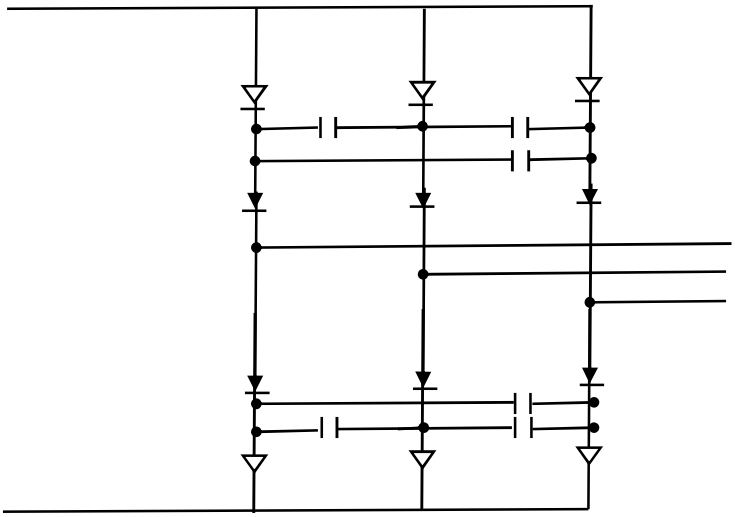

Figure 8.13 Configuration of a traditional inverter

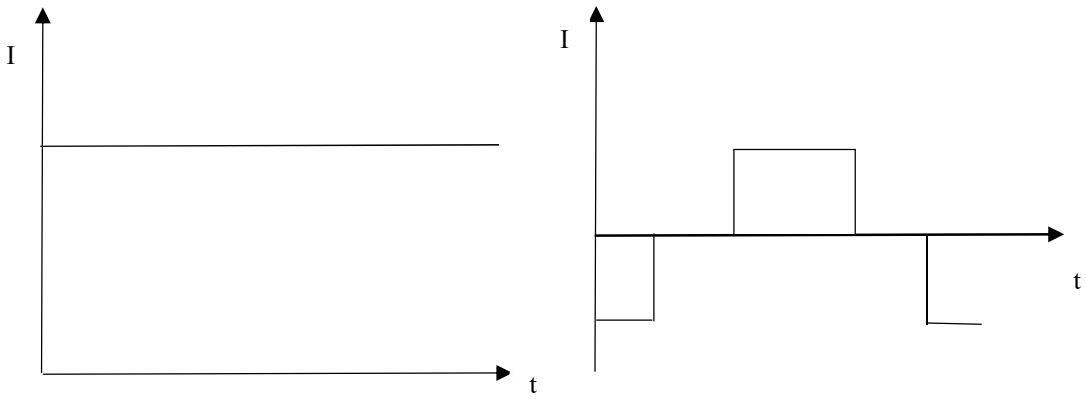

Figure 8.14 Input and output for a variable current inverter

In inverters operating on variable or constant voltage, there are six switching semi-conductors that are switched on and off using a number of modulating techniques.

PAM

One type of inverter control is called Pulse Amplitude Modulation (PAM) and is used with a variable voltage intermediate circuit. Both the coil and capacitor act as a filter that smoothens the voltage ripple. The voltage peak depends on the opening times of the transistor and the chopper is regulated until the required voltage level is reached.

PWM

Another technique used for switching the semi-conductors is Pulse Width Modulation (PWM). In this method, the width of the pulse is controlled. Modulation of the amplitude for PAM and width for PWM is shown in Figure 8.15.

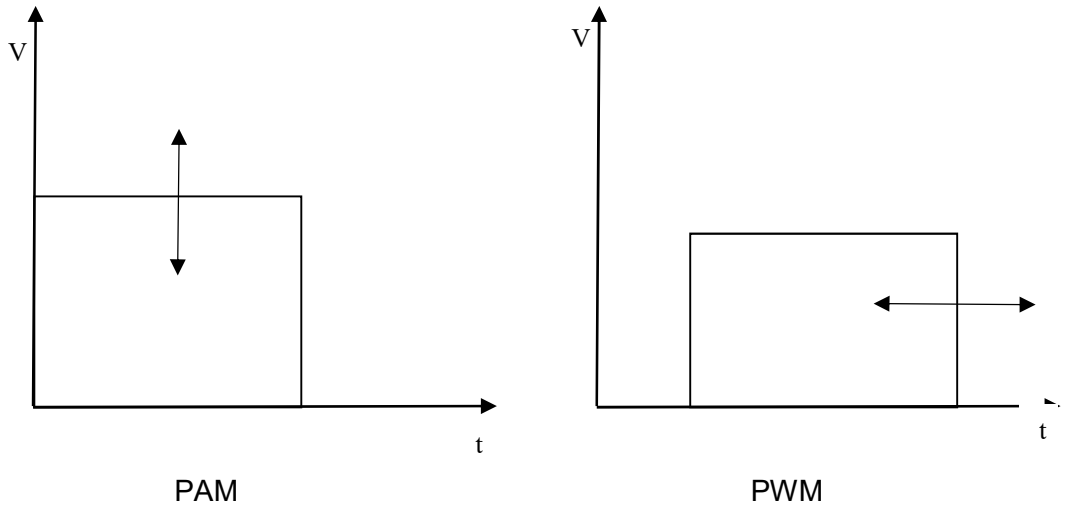

Figure 8.15 Modulation of amplitude and pulse width

The main advantage of PWM is that it has better power conversion efficiency. When a switch is off, there is no current flow, and when it is on and power is being transferred to the load, there is almost no voltage drop across it. Since power loss is the product of voltage and current, it is zero in both situations. It also has less noise interference and higher power handling capacity. The main disadvantage of PWM is that it requires semiconductor devices to turn-on and turn-off (makes it more expensive).

Transistors

High-frequency transistors can be used for modulating the output voltage. The three main types are:

- Bipolar (LTR)
- Unipolar (MOS-FET)
- Insulated-Gate-Bipolar (IGBT)

Today, IGBT transistors are the most widely used as they combine the control properties of MOS-FET transistors with the output properties of the LTR transistors and have the right power range, conductivity, switching frequency and ease of control for modern frequency converters.

Control circuit

Controls the operation of the VSD including turning on the rectifiers and transistors.

The simplified configuration of a three-phase VSD showing the interconnection between the different components is shown in Figure 8.16.

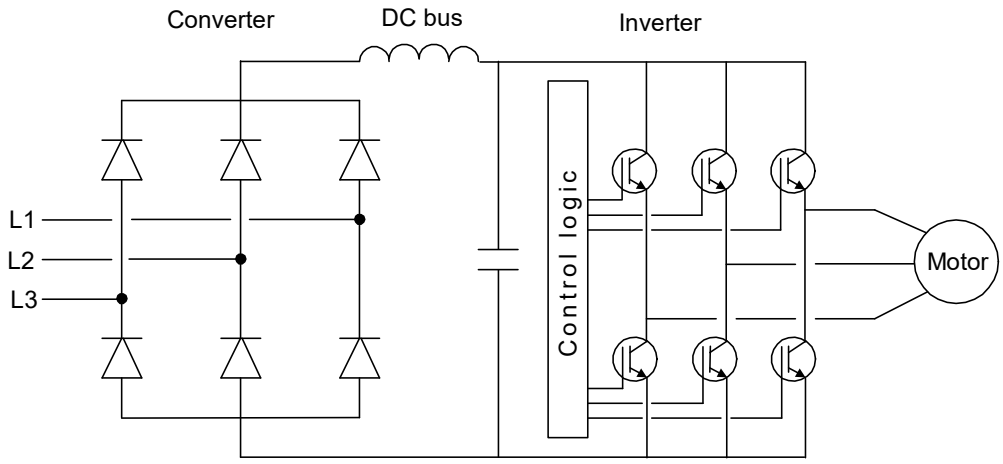

Figure 8.16 Simplified configuration of a three-phase VSD

8.3 VSD characteristics

The torque developed by an induction motor depends on the amplitude of the rotating flux density and the slip speed of the rotor. The amplitude of the rotating flux density is directly proportional to the supply voltage to the stator windings. It is also inversely proportional to the frequency of the power supply.

Therefore, when the operating speed is reduced to provide the required torque, the magnitude of the flux wave has to be adjusted to provide the rated value. Since the frequency is reduced to achieve the reduced operating speed, the voltage also has to be reduced. Most inverter drives operate by maintaining the ratio of the voltage-to-frequency (V/f) constant.

The constant voltage-to-frequency ratio can only be maintained up to the rated speed (rated voltage and rated frequency). Thereafter, if the frequency is increased further, the voltage will remain the same as the inverter drive is not able to deliver a higher voltage than the supply voltage. Hence, once the rated speed is exceeded, the voltage-to-frequency ratio reduces. As a result, the magnetic field weakens and the torque generated by the motor drops.

The motor power increases with speed until the rated speed is achieved and then remains unchanged up to 200% of the rated speed.

The motor torque and power variation when a motor speed is varied from rest to 200% of its rated value (100 Hz for a motor operating on 50 Hz supply) are shown in Figures 8.17 and 8.18.

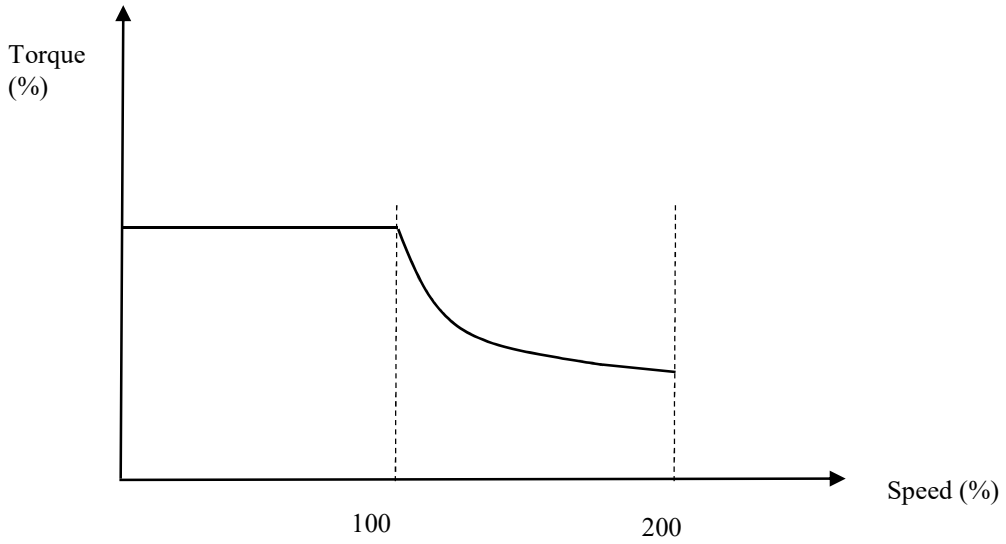

Figure 8.17 Motor torque – speed variation with an inverter drive

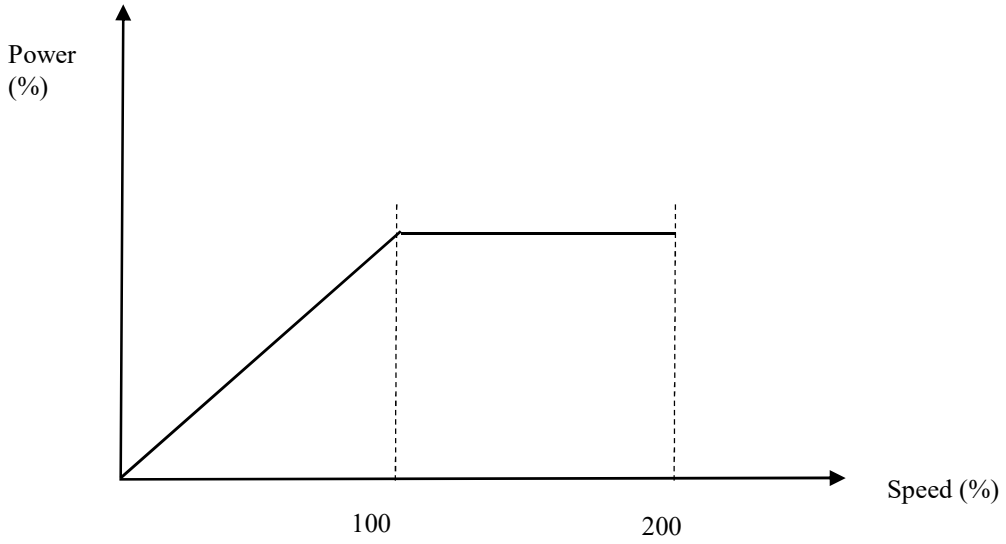

Figure 8.18 Motor power – speed variation with an inverter drive

Changes in the voltage-to-frequency ratio influences the torque characteristics. Figure 8.19 shows the torque characteristic when the voltage-to-frequency ratio is reduced.

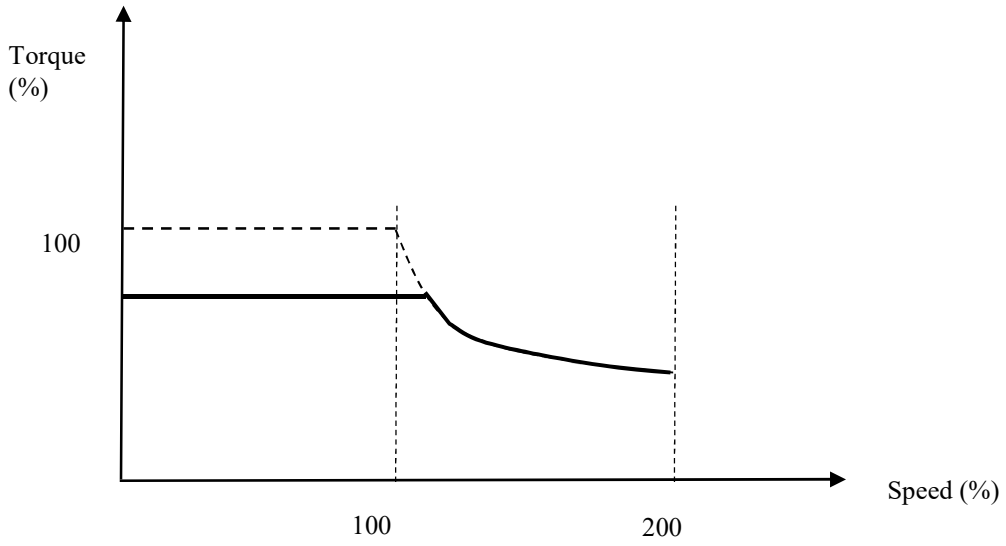

Figure 8.19 Motor torque characteristic and reduced v/f ratio

The two main types of load torque are constant torque and torque that varies with the square of the speed (Figure 8.20).

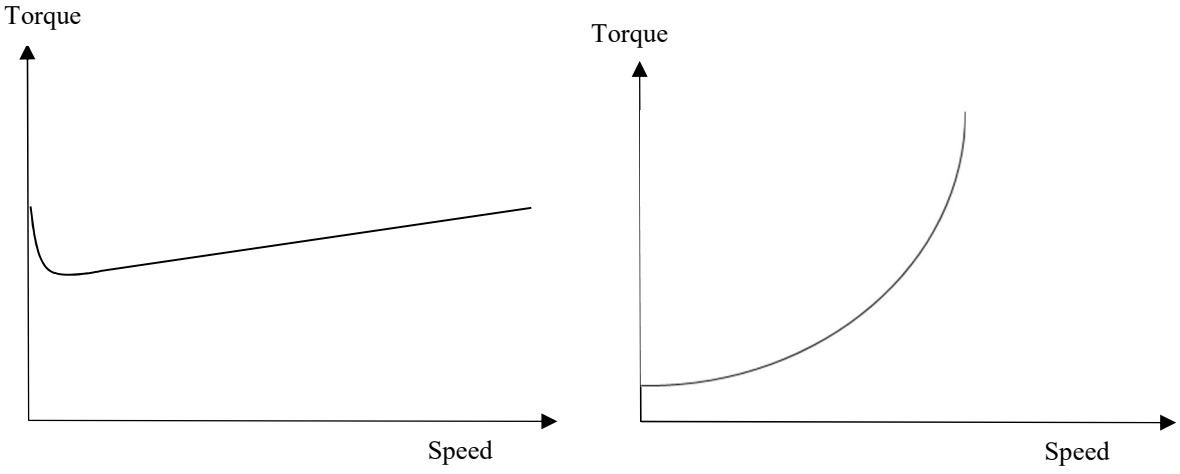

Constant Square (variable)

Figure 8.20 Constant load and square load torque

For constant load torque applications, a drive can be selected based on the rated output torque of the drive. For centrifugal pump and fan applications (square load torque), drives can be selected by comparing the expected torque variation for the load with the rated torque value of available drives.

Figure 8.21 shows an application where the load torque is within the rated output of the drive (up to the rated speed). Since inverter drives are normally designed to provide an overload torque of about 60%, the additional torque can be used to overcome high starting torque or for acceleration, as shown in Figure 8.22.

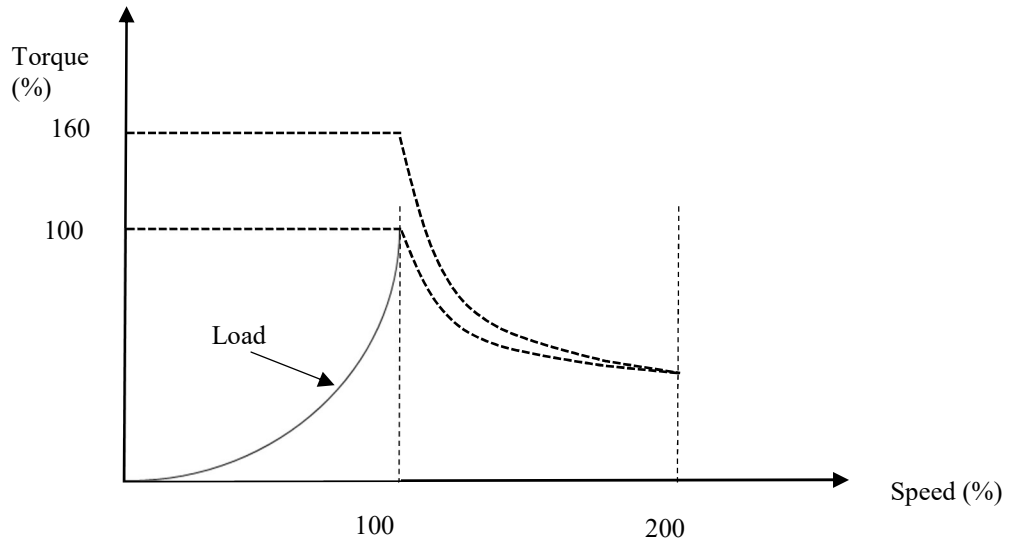

Figure 8.21 Motor and load torque

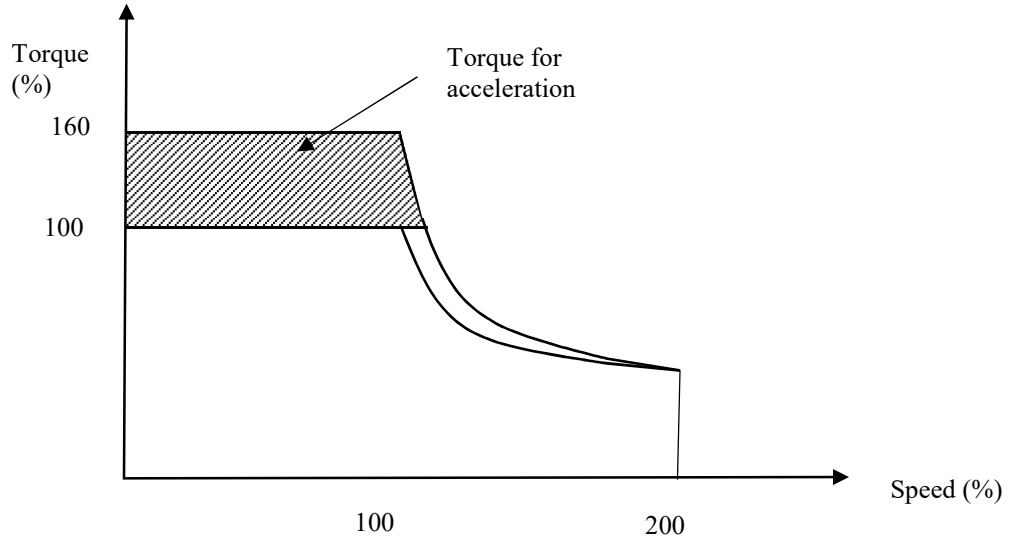

Figure 8.22 Overload torque used for acceleration

If the drive does not provide overload torque, then a higher capacity drive has to be selected so that the acceleration torque is within the rated torque as shown in Figure 8.23.

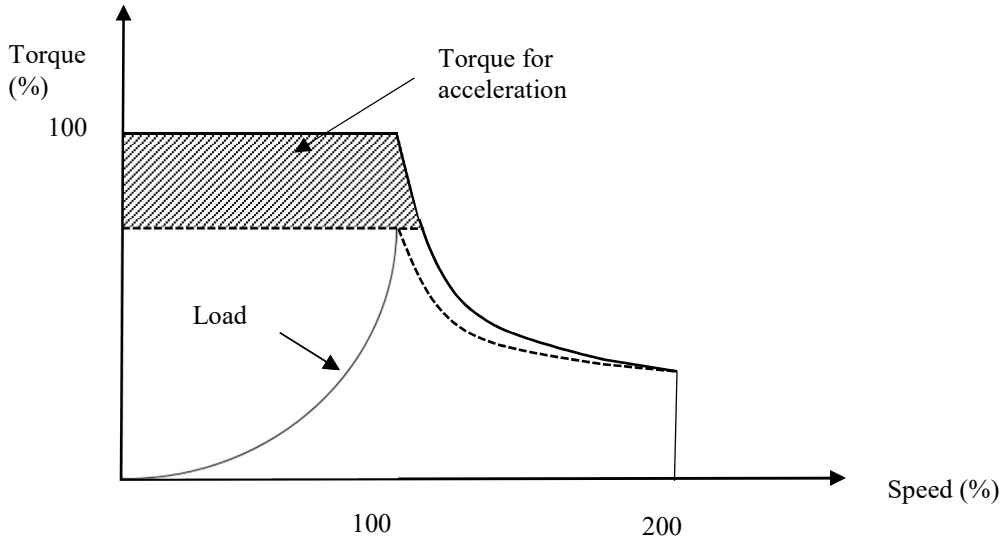

Figure 8.23 Inverter drive with no overload torque

8.4 Sizing of VSDs

Once the load characteristics have been established, the VSD can be sized using one of the following criteria.

Current output

A VSD can be selected based on the motor operating current. If the motor is operating at constant load, the current can be measured and used to select a VSD that can provide a maximum continuous current higher than the measured value.

Apparent power

A VSD can be selected based on the apparent power of the motor. The voltage and current drawn by the motor can be measured and the kVA computed using equation (8.1).

$$\text{Apparent power in kVA} = \frac{\sqrt{3} \times V \times I}{1000} \qquad (8.1)$$

where,

V = phase to phase voltage

I = line current

Once the apparent power of the motor is established, a VSD with a rated continuous apparent power equal to or higher than the required value can be selected.

Motor power drawn

A VSD can be selected by measuring the power drawn by the motor. However, this method is not very accurate as the power factor and motor efficiency can change with load.

Motor rating

This is the most common method of selection where the VSD is selected based on the rated power of the motor. This method is convenient as VSDs are also rated based on the standard output rating of asynchronous motors (e.g. 5.5, 11, 22 kW)

8.5 Features of VSDs

Today's VSDs have many built-in functions and features which make them more than just devices to vary the voltage and frequency of the power supply to motors. VSDs are able to take different forms of inputs that can be processed by the built-in controller while various outputs can also be provided for monitoring by external systems.

The main types and inputs and outputs are listed below.

Digital inputs

Digital inputs are used to interface the VSD with start / stop push button switches, selector switches and relay contacts from various control circuits.

Digital outputs

They are relay outputs called "dry contacts" which are used to switch external devices such as solenoids, alarms and pilot lights.

Analogue inputs

Analogue inputs are normally, voltage (0 to 10 V DC) or current 4 to 20 mA from external sources such as sensors which can be used for controlling the output from the drive. Most VSDs can also take direct input from sensors such as RTDs (resistance temperature detectors).

Analogue outputs

Analogue outputs are provided to external devices to monitor parameters such as current and speed of the drive.

Figure 8.24 shows a typical speed control system for a pump using the line pressure as the input. The pressure sensor provides an analogue input such as 0 to 10 V DC or 4 to 20 mA from its transmitter to the VSD controller. The controller uses this input to compare with the required set-point to vary the speed of the pump.

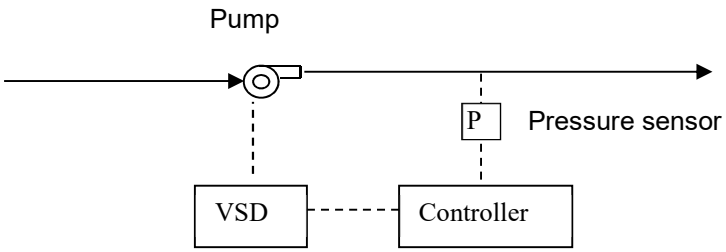

Figure 8.24 Typical arrangement of a VSD used for pump speed control

Adjustable parameters

Various parameters used to operate a VSD are user adjustable so that they can be set to meet the specific needs of each system. Some common parameters that can be user defined are:

- Minimum and maximum speeds
- Control set-points
- Ramp-up and ramp-down rates
- PID (proportional, integral and derivative) values for control

Performance parameters

The performance of most VSDs can also be monitored during operation. The monitoring can be local using the display panel on the VSD or external using the communication port of the drive. Some typical performance parameters that can be monitored are:

- Speed (frequency)
- Current
- Voltage
- Power factor
- Power (kW)
- Cumulative energy consumption (kWh)
- Cumulative running hours

8.6 Typical applications

VSDs are commonly used as a means of controlling the capacity of motor driven systems like pumps, fans and compressors. In such applications, a process variable is used to determine the actual demand and the VSD is used to vary the speed of the motor driven system to match the supply to the demand.

Some typical systems are shown in Figures 8.25 to 8.31.

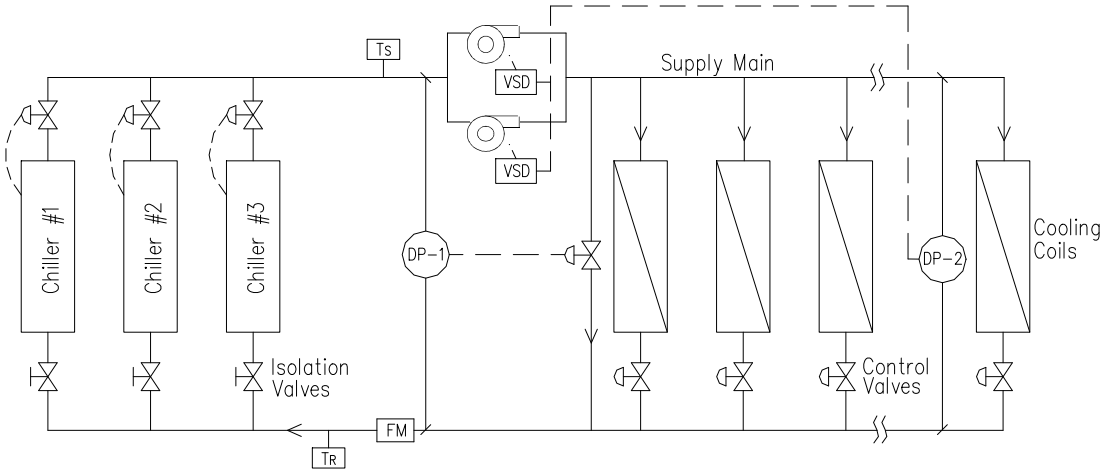

Figure 8.25 Control of chilled water distribution pumps in a chiller system

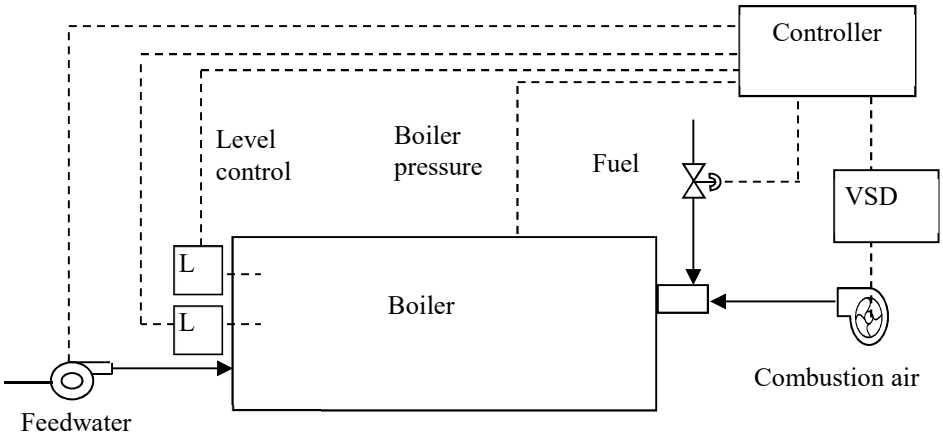

Figure 8.26 Control of boiler fan capacity

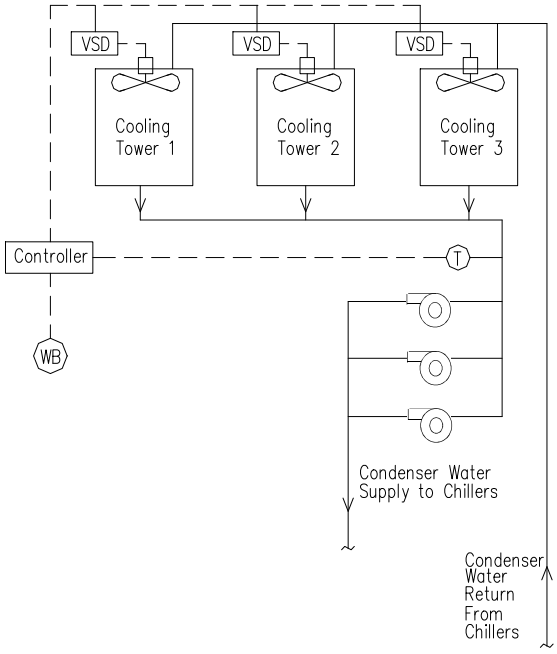

Figure 8.27 Control of cooling tower fan

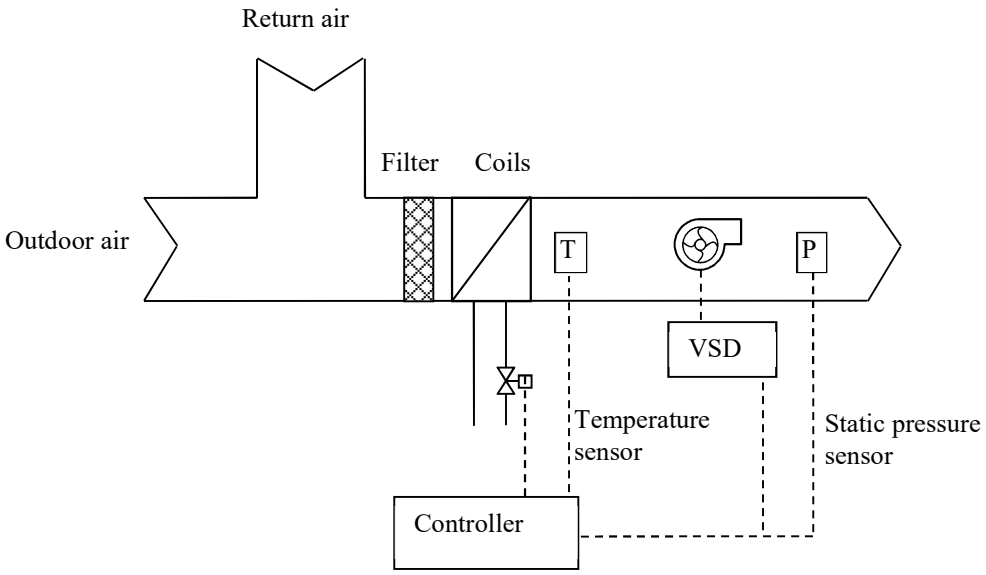

Figure 8.28 Control of air handling unit fan to maintain static pressure

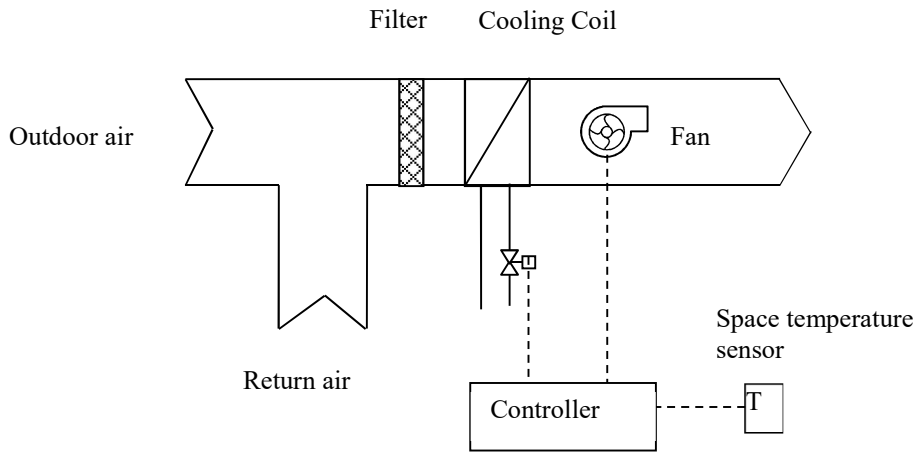

Figure 8.29 Control of air handling unit fan to maintain space temperature

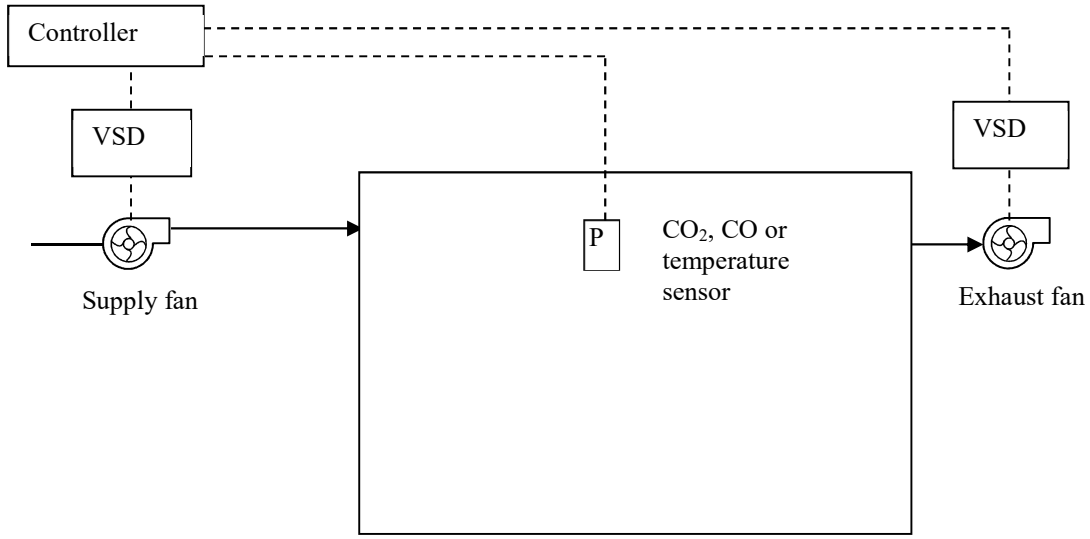

Figure 8.30 Control of ventilation fans to maintain CO_2 or CO level or temperature

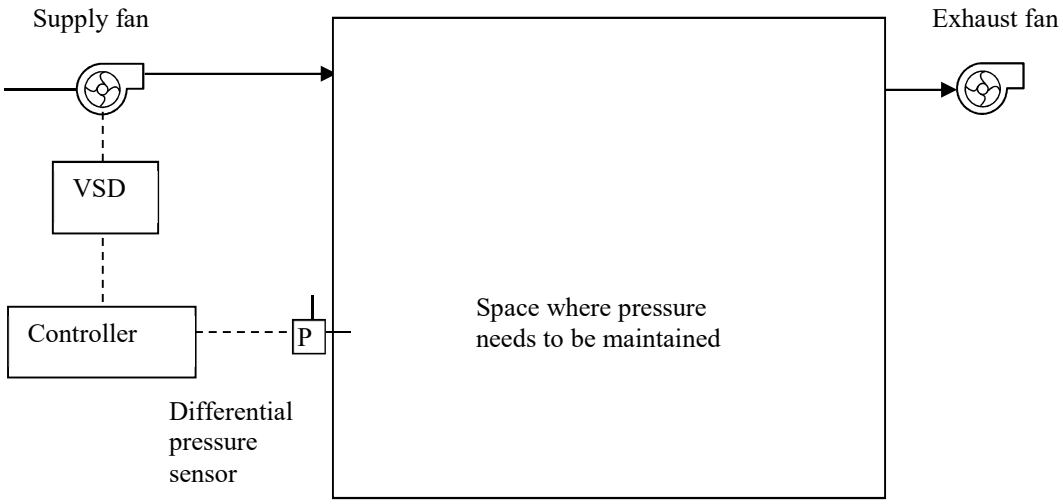

Figure 8.31 Control of ventilation fans to maintain static pressure

8.7 Selection and Installation

Type of drive

Correct selection and installation is important for ensuring problem free operation of VSDs. The drive unit should be selected based on the load characteristics. For most loads such as pumps and fans, the load torque reduces when speed reduces and therefore, variable torque drives can be used. However, for applications such as conveyors and traction drives, torque remains constant irrespective of speed and hence, constant torque drives are required.

Location

The installation location is also important to ensure reliability and performance of VSDs. Drive units generate heat during operation and therefore need to be installed in a location where adequate ventilation is available. In addition, the location should be dry and relatively clean (free of dust and corrosive elements).

Another important aspect of VSD installation is the distance between the drive unit and the motor. Maximum allowable cable length between the drive and motor is usually specified by the drive manufacturer and should not be exceeded to prevent high voltage spikes that can damage the motor.

Line reactors

Line reactors which are essentially inductors are often installed before or after the drive to stabilise the current waveform and reduce harmonics. When installed before

the drive, they help to stabilise the waveform of the current supplied to the drive which may be distorted by non-linear loads. Since VSDs generate harmonics when converting AC to DC and DC back to AC, line reactors installed between the drive and motor helps to smoothen the waveform by absorbing line spikes and filling voltage sags (Figure 8.32).

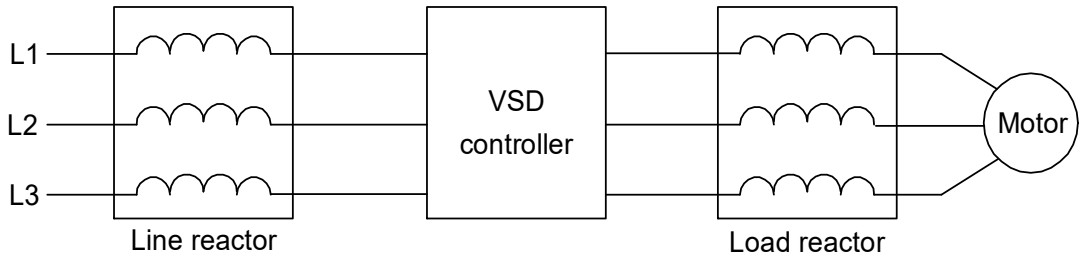

Figure 8.32 Line reactors installed to reduce harmonics

Bypass

In most VSD installations, to improve system reliability, it is necessary to be able to bypass the drive in case of failure so that the system can be operated using a normal starter.

For this purpose, a bypass contactor arrangement can be installed as shown in Figure 8.33. The bypass contactor arrangement consists of a main contactor and an isolation contactor interlocked with the bypass contactor. When the drive is bypassed, the isolation contactor is opened and the bypass contactor is closed.

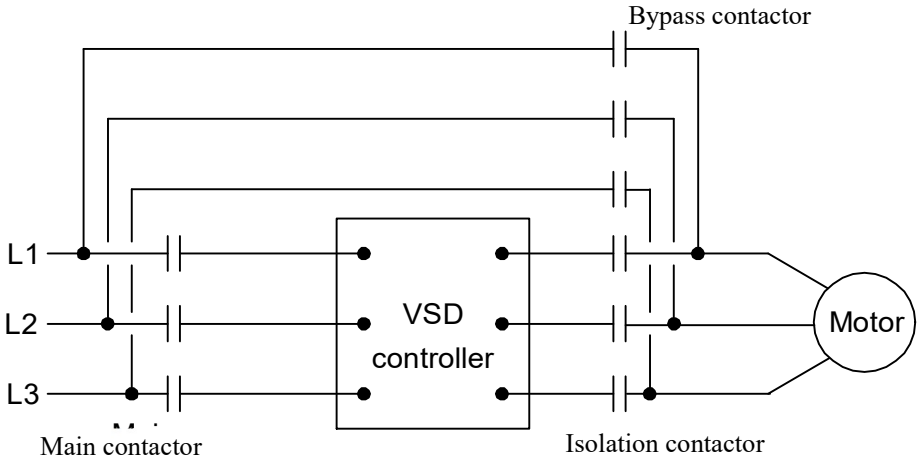

Figure 8.33 Arrangement of a bypass contactor

8.8 General list of selection criteria for VSDs

The following is a brief checklist of points that should be considered when selecting a frequency converter [1]:

Details of the machine to be controlled

- Required plant / machine characteristics
- Torque characteristics, stalling torque, acceleration torque
- Speed control range
- Power consumption of the converter and the motor
- Operating quadrants
- Slip compensation
- Required ramp-up and ramp-down times
- Required braking times, brake operating time
- Direct drives, gears, transmission components, moment of mass inertia
- Synchronization with other drives
- Operating time, controls
- Computer linkage, interfaces, visualisation
- Design and protection type
- Possibility of integrating decentralised intelligence in the frequency converter

Environmental details

- Installation height, ambient temperature
- Cooling requirement, cooling options
- Site conditions, such as humidity, water, dirt, dust and gases
- Acoustic requirements

Power supply

- Supply voltage, voltage fluctuation and voltage dropout
- Frequency fluctuations
- Interference
- Short-circuit and overvoltage protection

Maintenance

- Training and capability of operators
- Maintenance regime
- Spare parts / spare unit availability

Financial Criteria

- Purchase cost
- Installation cost
- Commissioning and setup cost
- Operating cost
- Efficiency of the system
- Reactive power requirement and compensation for harmonic loads
- Product lifetime

Protective measures

- Galvanic isolation
- Phase drop-out
- Switching at the converter output
- Earth and short-circuit protection
- Electronic thermal monitoring

Standards and regulations

- National (DIN, BS, EN, SS)
- International (IEC, CE)
- Special regulations (e.g. mining, chemical industry, ship building, food technology)

Summary

This chapter provided a description of the main components of VSDs, their functions and key operating principles. Thereafter, their characteristics, basis for sizing, important features and installation criteria were presented. Finally, common applications of VSDs and important selection criteria were discussed.

References

1. Facts worth knowing about frequency converters, Danfoss Drives, 1998.
2. Jayamaha, Lal, Energy-Efficient Building Systems, Green Strategies for Operations and Maintenance, McGraw-Hill, New York, 2006.
3. Jayamaha, Lal, Energy-Efficient Industrial Systems, Evaluation and Implementation, McGraw-Hill, New York, 2016.
4. Subrahmanyam, V, Electric Drives, Concepts and Applications, McGraw-Hill, New Delhi, 2013.

9.0 MAINTENANCE OF MOTOR DRIVEN SYSTEMS

This chapter explains the importance of maintaining motor driven systems so that they can be operated reliably and efficiently. In addition, the main types of maintenance strategies that can be used for motor driven systems and good maintenance practices applicable for motor driven systems are described in this chapter.

Learning Outcomes:

The main learning outcomes from this chapter are to understand:

1. The importance of maintaining motor driven systems
2. Types of maintenance programmes
3. Good maintenance practices

9.1 Importance of maintaining motors

Proper maintenance is required to ensure reliability and good performance of motors and motor driven systems. Motor driven systems can be allowed to operate till they breakdown but this would result in disruptions to operations and high cost to repair them.

The reliability of motor driven systems, which is their ability to operate under normal operating conditions without failure, can be directly related to productivity (Figure 9.1). This is because, if a system fails to operate, then it is not able to provide the required output which in turn would result in loss of production.

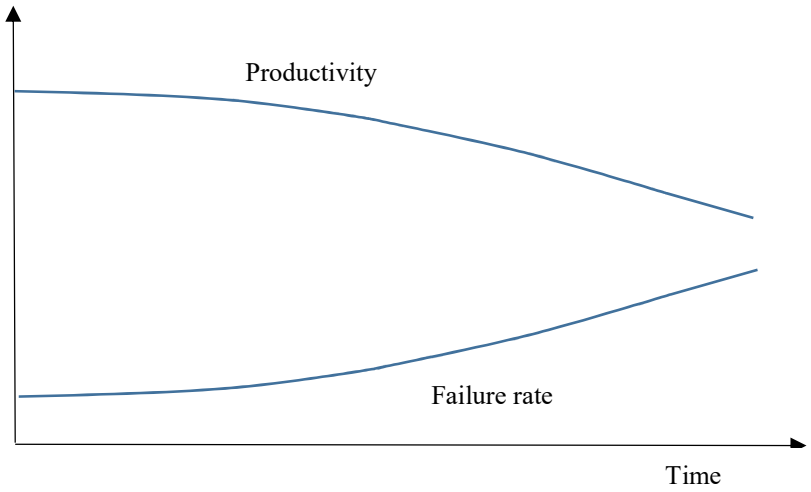

Figure 9.1 Typical correlation between productivity and failure rate

In addition to reliability, some of the other aspects related to maintenance are:

- Energy efficiency – reduced efficiency due to operation of the system under abnormal conditions
- Operating cost – due to the need for operating alternative systems which may not be able to operate under optimum conditions
- Safety hazards – components may become loose and cause damage to other equipment or operators
- Fire risk – overheating of components can lead to fire

The performance of motor driven systems deteriorates when they are not well maintained. Some examples of poor maintenance leading to drop in performance of motor driven systems are listed below in Table 9.1.

Condition	Outcome/s
Blocked pump strainer	• Reduced flow rate • Increased pump pressure • Higher pump energy consumption
Dirty fan filter	• Reduced air flow rate • Increased fan static pressure • Higher fan energy consumption
Misalignment between motor and driven system	• More noise and vibration • More wear and tear (belts & couplings etc.) • Frequent bearing failure • Higher drive losses
Insufficient lubrication	• More noise and vibration • More wear and tear • Frequent bearing failure • Higher drive losses
Unbalanced impeller	• More noise and vibration • More wear and tear • Frequent bearing failure • Higher energy losses
Loose mountings	• More noise and vibration • More wear and tear

	• Frequent bearing failure
Dirty motor	• Higher motor temperature • Reduced motor life • Reduced motor performance
Loose electrical connectors	• Higher temperature at joints • Higher energy losses • Greater fire risk

Table 9.1 Poor maintenance and related outcomes

Therefore, to ensure that motor driven systems can operate without breakdowns and unplanned stoppages, well designed maintenance programmes need to be implemented.

9.2 Types of maintenance programmes

Maintenance programmes usually follow one of the following three strategies:

1. Reactive (breakdown) maintenance
2. Preventive maintenance
3. Predictive maintenance

Reactive maintenance

Reactive maintenance (also sometimes called breakdown maintenance), involves operating an item of equipment until it breaks down. Thereafter, the equipment is repaired or replaced.

Usually, this maintenance strategy is applied only for non-critical equipment which does not have a direct or immediate impact on productivity. For example, reactive maintenance could be applied to a pump that serves a storage tank. If the tank can store a sufficient volume of liquid, the pump can be repaired or replaced before the tank volume reaches a minimum level.

Preventive maintenance

Preventive maintenance involves taking corrective action on a periodic basis. This action is usually done irrespective of the actual performance of the equipment.

Some common preventive maintenance tasks are listed below:

- lubrication of moving parts like bearings, gear wheels

- cleaning of components like strainers, filters and outer surfaces
- replacement of components like bearings, cables and belts after a fixed period of time
- checking and adjusting of mountings, alignment of drive components, hoisting cables and safety devices
- overhauling of equipment like compressors, motors, pumps, fans and elevator drives

Predictive maintenance

Predictive maintenance involves periodically (or continuously) monitoring critical operating parameters that are then analysed to predict failures before they occur.

Typical data collected for predictive maintenance include:

- vibration levels
- motor temperature
- resistance of motor windings
- thermography
- oil sampling
- acoustic (noise) levels

Details of monitoring technique, application and type of maintenance problems detected are summarised in Table 9.2.

Predictive maintenance is better than both reactive maintenance and preventive maintenance. Since in predictive maintenance, failures can be predicted before they occur, they can be prevented by timely corrective action, unlike in the case of reactive maintenance, where action can be taken only after equipment failure.

Monitoring technique	Application	Problems identified
Vibration analysis	Rotating machines like pumps, fans, compressors, motors and gear boxes	Bearing failures, unbalanced rotors, loose mountings, misalignment and rotor defects
Motor temperature	Motors	Defective motor windings, changes in power supply, overloading of motor
Resistance of motor windings	Motors	Defective windings, insulation, grounding
Thermography	Electrical components	Loose connections, over loading
Oil sampling	Gear boxes, cooling systems	Excessive wear of components
Acoustic / ultrasound detection	Packing machinery, steam pipes, compressed air pipes	Abnormal operation that cannot be visually observed and detection of leaks

Table 9.2 Predictive maintenance techniques

Predictive maintenance is better than preventive maintenance because it does not involve taking preventive action irrespective of the condition of the equipment. For instance, in preventive maintenance, a particular bearing may need to be replaced every 10,000 hours of operation, whereas in predictive maintenance, the bearing will be replaced only if it is likely to fail based on the trend data of vibration levels. In actual operation, the bearing may be able to operate much more than 10,000 hours as this value is set based on statistical analysis of the probability of bearing failure. Conversely, a particular bearing may have a manufacturing defect and may fail before the rated 10,000 hours. Using predictive maintenance will be able to predict this failure and avoid unexpected downtime. Therefore, predictive maintenance will result in lower maintenance cost and improved reliability.

9.3 Good maintenance practices

Some good maintenance practices for motors and motor driven systems are listed below.

Lubrication

Generally, rotating machinery like motors, pumps, fans and compressors require periodic greasing of bearings. However, since contaminated grease can lead to bearing failures, it is essential to ensure that the fittings are clean prior to injecting grease.

Over-greasing should be prevented as it leads to increased friction resulting in bearing failure. Excess grease can also leak onto the motor windings, which can cause failure.

Care should be taken to ensure that the correct type of grease as recommended by the manufacturer is used.

Cleaning

Regular cleaning of motors is essential as dirt can enter the motor and attack the insulation as well as contaminate lubricants and damage bearings. Also, dirt buildup on the motor enclosure and fan cover can lead to the motor operating at a higher temperature which will reduce the efficiency of the motor and its operating life.

If the air flow at the fan discharge is weak, it can indicate that the internal passages are blocked. The motor should then be taken out of service and cleaned.

Severe corrosion may indicate deterioration of internal surfaces. Such motors should also be checked, cleaned and painted where necessary.

Motor temperature

High motor temperature leads to failure and is an indication of other motor problems. Some of the common reasons for high motor temperature are wrong selection of motors (under sizing of motor or wrong motor starting torque characteristic) and over loading of the motor. In addition, poor cooling due to dirt accumulation and damage to the cooling fan can also result in high motor operating temperature.

Excessive heat can damage the insulation which shortens the winding life (and therefore motor life). Therefore, motor operating temperature should be checked periodically.

Voltage Testing

Supply voltage to motors should not deviate more than ±10% of the design nominal voltage. High deviations in voltage can lead to decreased motor efficiency and shorter motor life. Similarly, unbalanced phase voltages can lead to high rotor currents, resulting in higher temperatures and high motor losses. Therefore, regular voltage measurements when the motor is operating can help identify problems and ensure efficient operation.

Insulation Testing

Resistance testing of motor insulation periodically in predictive maintenance programmes can help to identify degradation of insulation. The most common insulation test is a “megger test” which involves injecting DC voltage of 500 to 1000 volts to the motor and testing the resistance of the insulation. Usually, a minimum resistance to ground of 1 megohm per kV of rating plus 1 megohm at 40°C ambient conditions is required. Motors in good condition will normally show readings of more than 50 megohms. Low readings indicate a reduction in insulation resistance which can be a result of moisture ingress, deterioration from age or excessive heat.

Measured data can be trended to indicate a deterioration of motor windings. Where required, motors can be taken out of service and sent for cleaning and baking to avoid the need for a complete rewinding.

Such testing is specially required for motors that operate in wet, corrosive and hot environments.

Vibration

Motor vibration can be caused by misalignment of the motor shaft, loose mountings, unbalanced rotor or damaged bearings. Motor vibration can also be sometimes transmitted from the driven load. Vibration can cause damage to winding by loosening, cracking or abrasion. Vibration can also lead to premature bearing failure.

Therefore, motor vibration levels should be monitored periodically and trended to indicate potential problems so that they can be rectified before causing damage.

Alignment

It is important to ensure that the motor shaft and the shaft of the driven load are aligned as misalignment can lead to vibration, noise, damage to coupling, premature failure of bearings as well as lower transmission efficiency.

There are three basic types of misalignment as shown in Figure 9.2. Angular misalignment occurs when the motor shaft is at an angle to the shaft of the driven load while parallel misalignment is when the centerlines of the two shafts are parallel to each other. Combination misalignment occurs when both angular and parallel misalignment is present.

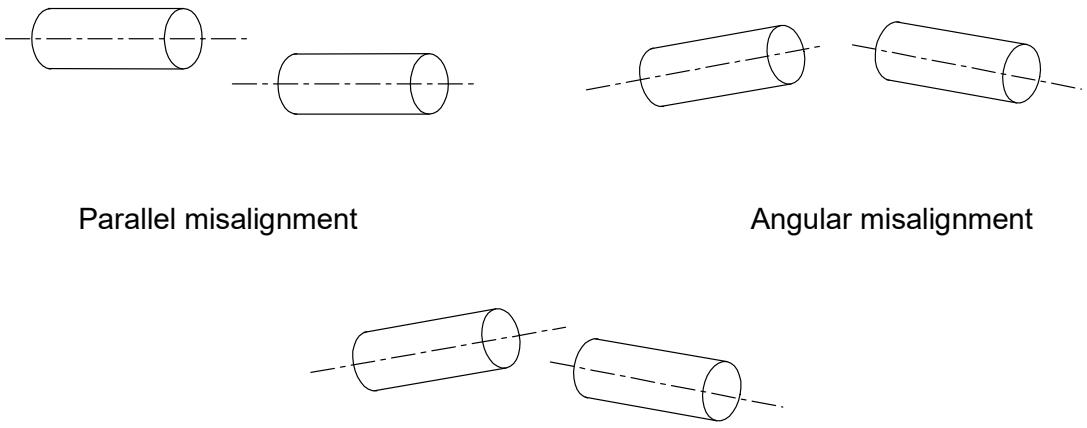

Figure 9.2 Types of shaft misalignment

Ideal alignment is achieved when the centerlines of the motor shaft and driven load are in-line with each other.

Summary

This chapter explained the importance of maintaining motor driven systems so that they can operate reliably and efficiently, followed by the main types of maintenance strategies and some good maintenance practices for motor driven systems.

References

1. Energy Management of Motor Driven Systems, US Department of Energy, Office of Industrial Technologies, 2000.
2. Improving Fan System Performance: A source book for industry, US Department of Energy Industrial Technologies Program, 2003.

3. Improving Motor and Drive System Performance: A source book for industry, US Department of Energy Industrial Technologies Program, 2008
4. Improving Pumping System Performance: A source book for industry, US Department of Energy Industrial Technologies Program, 2008.
5. Jayamaha, Lal, Energy-Efficient Building Systems, Green Strategies for Operation and Maintenance, McGraw-Hill, 2006.
6. NEMA (National Electrical Manufacturers Association), Standards Publication MG1-2006.

10.0 TRANSMISSION DRIVES

A typical motor driven system is shown in Figure 10.1 where a transmission drive system is normally installed between the motor and the driven load. The purpose of the transmission drive system can be for a variety of reasons such as to:

- take misalignment between the motor and the load
- increase the torque
- change the speed of rotation
- change the direction of rotation
- absorb the impact of fluctuating or shock loads

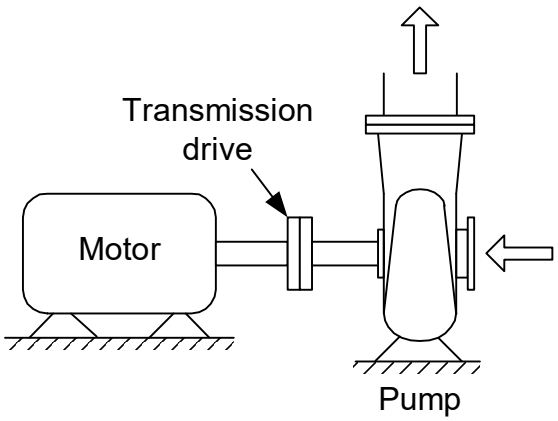

Figure 10.1 Arrangement of a typical motor driven system

The most commonly used types of transmission drive systems are:

- couplings
- belt drives
- gear drives
- chain and sprockets

Learning Outcomes:

The main learning outcomes from this chapter are to understand:

1. The need for transmission drives in motor driven systems
2. Types of transmission drives
3. Losses associated with drives
4. Computation of wire-to-water and wire-to-air efficiency

10.1 Couplings

In some applications, the motor torque is directly transmitted to the load through a coupling. Couplings can be rigid type or flexible type. Rigid couplings do not allow misalignment between the motor shaft and load shaft. Two common rigid couplings are sleeve and flange type and are shown in Figure 11.2.

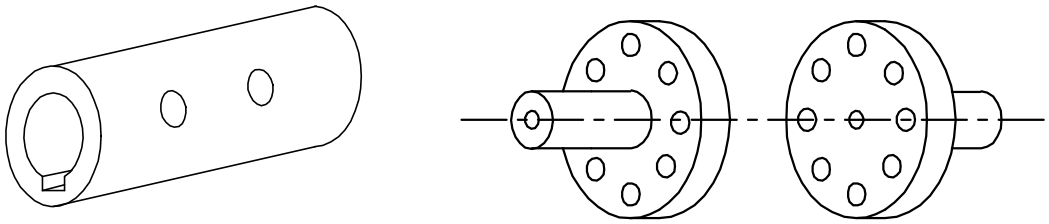

Sleeve type Flange type

Figure 10.2 Rigid couplings

Commonly used mechanical flexible couplings are pin type and spider couplings. Pin type couplings are similar to flange couplings, but have an additional rubber bush for each clamping hole of the flange so that the fasteners can be inserted through them. Since the rubber bushes are flexible, they can accommodate some misalignment between the two shafts.

Spider couplings consist of two end flanges with a rubber insert, placed between the two flanges to allow some flexibility in the power transmission. The arrangement of a flexible coupling is shown in Figure 10.3.

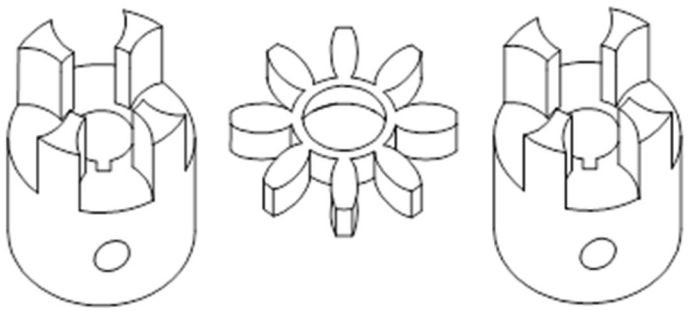

Figure 10.3 Spider type coupling

Another type of coupling that can be used is a hydraulic coupling. In such a coupling, two turbines are housed in an enclosure filled with a hydraulic fluid. The two shafts to be coupled are attached to the two turbines. The rotation of the turbine connected to

the drive side called the input turbine, forces the hydraulic fluid to rotate the output side turbine.

The transmission efficiency for couplings can range from almost 100% for rigid type with perfectly aligned shafts to a maximum of 94% for hydraulic couplings.

10.2 Belt drives

Many applications of motors in buildings and industrial plants such as fans, compressors and conveying systems use belt drives. They consist of pulleys on the shafts of the motor and load and one or more belts to convey the torque from the motor to the load. Since belt drives are relatively flexible, they are able to allow some misalignment between the two shafts.

There are different types of belt drives and the most common types are V-belts, cogged belts and synchronous belts. The efficiency of V-belt drives depends on factors such as design, pulley sizing and torque but generally have high efficiency ranging from 95% to 98%. Cross-section of V-belts, cogged belts and synchronous belts are shown in Figure 10.4.

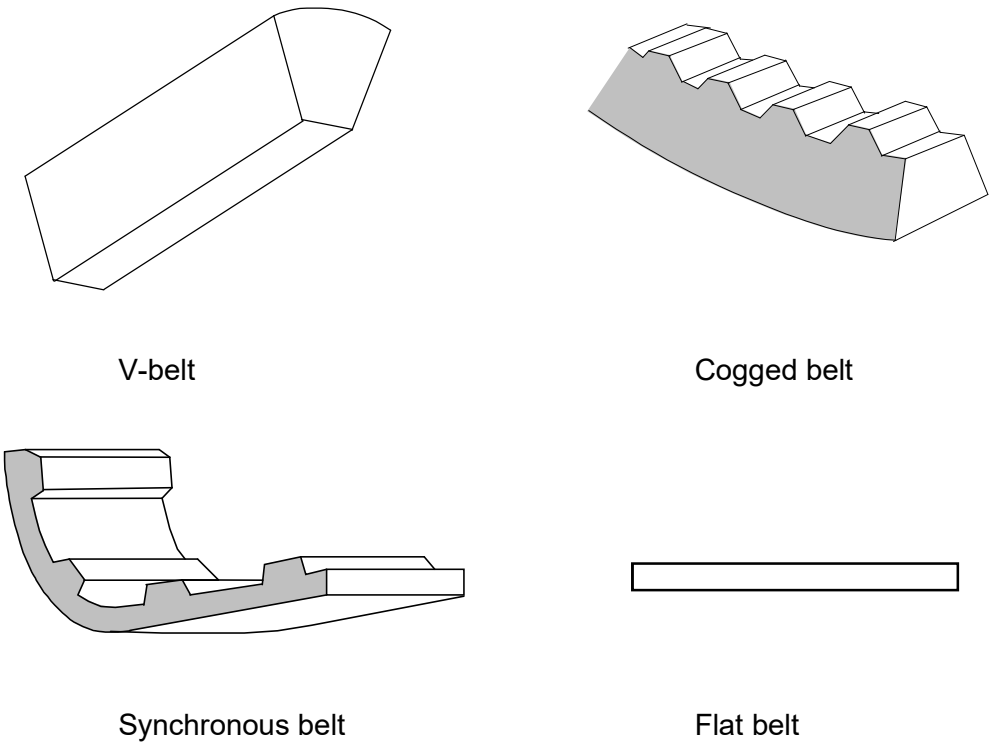

Figure 10.4 Different types of belts used for transmission

Cogged belts are similar to V-belts but have additional slots perpendicular to the belt to reduce the bending resistance of the belt. The transmission efficiency of cogged belts is about 2% higher than that of standard V-belts.

Synchronous belts which are also called timing belts are “toothed” and fit into matching toothed-drive sprockets. Synchronous belts operate at efficiency of about 98% and are able to maintain the efficiency at high torque conditions as their design prevents belt slippage.

The belt transmission efficiency increases with pulley size, because the bigger the pulley diameter the lower the friction losses. Also, the highest transmission efficiency is achieved when the load is close to belt capacity. This is because, if the belt is under sized, the resulting belt slip will result in high friction losses while, if the belt is oversized, the higher belt stiffness will also lead to higher friction losses.

10.3 Gear drives

Some typical types of gear wheels used for mechanical transmission are shown in Figure 10.5. Spur gears have teeth parallel to the axis of rotation. The drive gear rotates in one direction while the driven gear rotates in the opposite direction. However, both shafts have to be arranged to be parallel to each other.

Helical gears are a refinement of spur gears where the teeth are not parallel to the axis of rotation and are set at an angle. The angle of the teeth enables gradual engagement of the teeth which results in better efficiency and smoother operation.

A worm gear drive consists of a “worm” and a “worm gear”. The rotation of the power screw called the worm is used to transmit power to the worm gear. The shafts are arranged at 90° to each other and have to be non-parallel and not intersecting. They are used for high gear ratios ranging from 20:1 to as high as 300:1. One unique property of worm gears is that only the worm can rotate the worm gear and not vice versa. This is because the angle on the worm is so shallow that when the gear tries to spin it, the friction between the gear and the worm holds the worm in place. This unique property acts as a brake and prevents the load from rotating the drive. This is useful in applications like conveying systems.

Bevel gears have tooth bearing surfaces that are conical in shape. The shafts are normally arranged at 90º to each other, although they can be arranged to work at other angles.

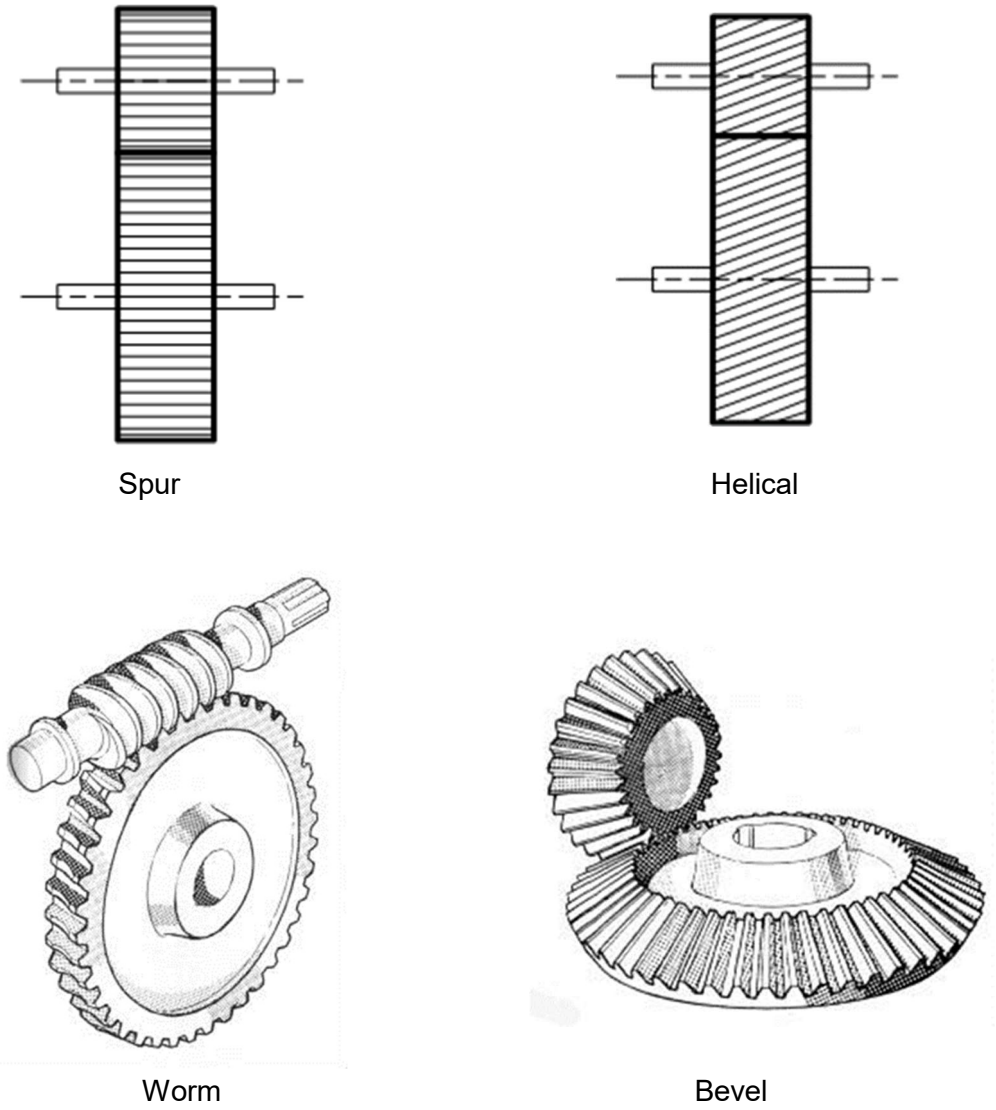

Figure 10.5 Types of gear transmission systems

Losses in gear drives arise mainly due to friction losses that take place when the gears mesh. Friction losses depend on factors like tooth profile, speed reduction and coefficient of friction of gear material.

The typical efficiency of different gears is shown in Table 10.1. As can be seen from the table, gear drives generally have a good efficiency of between 98 to 99% except for worm gears which can have efficiency as low as 20%. Such low efficiency for worm

gears is encountered at very high gear ratios such as 75:1 as compared to maximum gear ratios of about 15:1 for other types of gears.

Type of gear	Typical efficiency (%)
Spur	98 to 99
Helical	98 to 99
Bevel	98 to 99
Worm	20 to 98

Table 10.1 Efficiency of gears

10.4 Chain and sprocket

Chain and sprocket systems consist of two sprocket wheels mounted on the drive and driven shafts respectively, and a chain that transmits torque by meshing with the teeth on the sprockets. Well lubricated and maintained chain and sprocket drives can have operating efficiency as high as 98%. However, they cannot be used where there is misalignment between the drive shafts or for applications with shock loads.

10.5 Wire-to-water and wire-to-air efficiency

Wire-to-water efficiency is the overall efficiency of a pumping system that takes into account the individual operating efficiencies of the motor, pump and drive system. The same concept called wire-to-air efficiency is also applied to fan systems to include the motor, drive and fan efficiency values.

Constant speed pumps and fans

In constant speed and constant load applications, the wire-to-water and wire-to-air efficiencies remain constant as the individual operating efficiencies of the motor, drive system and pump or fan remain constant.

As shown in Figure 10.6, for a typical constant speed application using a standard efficiency motor of 88%, flexible coupling with transmission efficiency of 98% and a pump having an efficiency of 65% at the operating point, the overall energy efficiency of the motor driven system is 56% (0.88 x 0.98 x 0.65 =0.56). This indicates that for every unit of input energy that is used, only 0.56 units of energy is used to drive the load (0.44 units of energy are wasted).

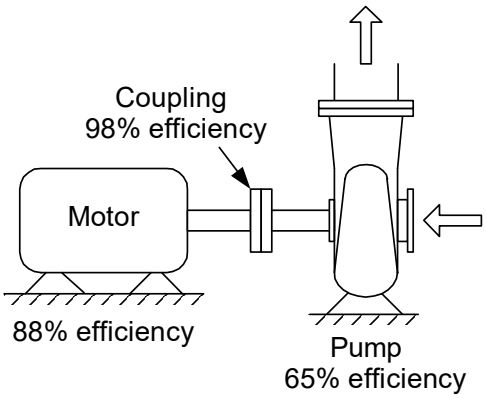

Figure 10.6 Wire-to-water efficiency of a typical motor driven pump

In addition to these drive system losses, the driven load will have various energy losses. As explained in earlier sections of this reference manual, energy wastage in the driven load occurs for many reasons like high friction / pressure losses caused by poor piping and ducting system designs, throttling of liquid and air flow rates and bypassing or discharging of excess output. The losses in typical pumping and fan systems due to such factors account for more than 30% resulting in an overall system energy efficiency of only about 39% (Figure 10.7).

As described earlier, the efficiency of the individual components and the driven load can be improved by using high efficiency motors selected to match the load requirements, selecting high efficiency driven systems like pumps, fans, compressors and lifts, and optimising the design of systems serving the actual loads to minimise losses.

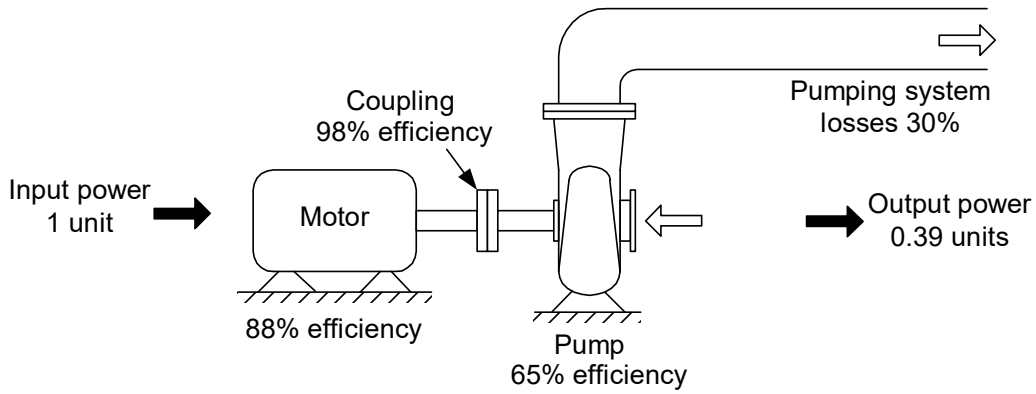

Figure 10.7 Overall energy efficiency of a conventional motor driven pumping system

Example 10.1

A water pump circulates 0.08 m^3/s of water when the total system pressure head is 300 kN/m^2. The pump efficiency at the operating point is 67%. The pump is driven by a motor through a mechanical coupling that has an efficiency of 98%. Taking the efficiency of the motor to be 88%, compute the theoretical input power to the motor.

If the total system pressure head is reduced to 250 kN/m^2 by reducing pressure losses in the system and the pump and motor are replaced with high efficiency units having efficiency of 75% and 92% respectively, estimate the new input power to the motor. Assume the efficiency of the mechanical coupling remains the same.

Solution

Present system

From equation (5.3), the input power to the pump in kW

= (0.08 m^3/s x 300,000 N/m^2) / (1000 x 0.67)

= 35.8 kW

Since the mechanical coupling has an efficiency of 98%, the input power at the coupling is 36.5 kW (35.8 / 0.98).

Similarly, the input power to the motor will be 36.5 kW / 0.88 = 41.5 kW (see Figure 10.8).

Proposed system

From equation (5.3), the input power to the pump in kW

= (0.08 m^3/s x 250,000 N/m^2) / (1000 x 0.75)

= 26.7 kW

Since the mechanical coupling has an efficiency of 98%, the input power at the coupling is 27.2 kW (26.7 / 0.98).

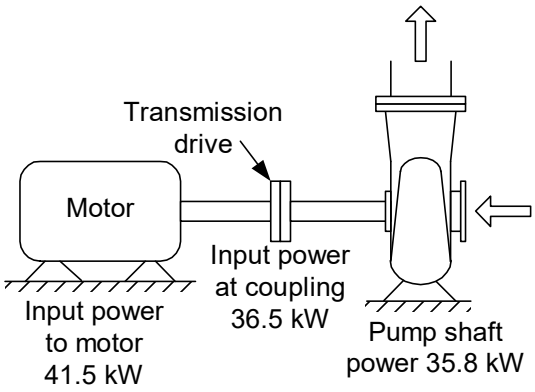

Figure 10.8 Present pumping system in example 10.1

Similarly, the input power to the motor will be 27.2 kW / 0.92 = 29.6 kW (see Figure 10.9).

Therefore, the input power has reduced from 41.5 kW to 29.6 kW, which is a 29% reduction in energy usage.

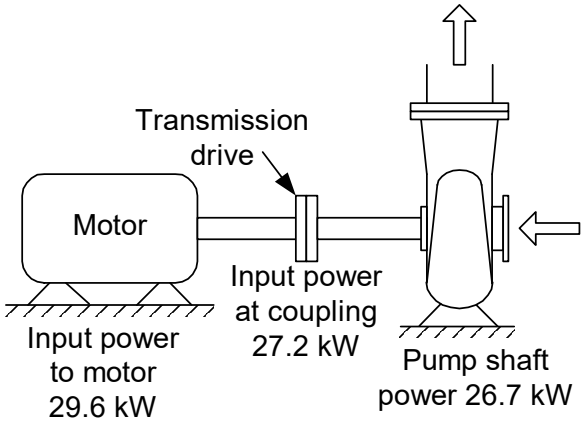

Figure 10.9 Proposed pumping system in example 10.1

Variable speed pumps and fans

In variable load applications, VSDs are used to match pump and fan capacity to the load, and the wire-to-water and wire-to-air efficiency does not remain constant (as in the case of constant speed operation). This is because, the pump or fan and motor efficiency vary at different speeds and loads. In addition, in variable speed applications, the efficiency of the VSD also needs to be included in the efficiency computation.

As explained earlier, the operating efficiency of motors depends on loading and the best efficiency is achieved at the rated capacity. Therefore, when a motor experiences lower loads at lower operating speeds, the motor efficiency reduces from its rated value. Similarly, the efficiency of pumps also depends on the operating speed and varies when the flow rate and head changes at different operating speeds.

Therefore, the wire-to-water efficiency computation for a variable speed pumping system requires the actual efficiency of the pump, motor and drive at the different operating speeds. Such information normally needs to be obtained from the respective equipment suppliers.

The wire-to-water efficiency can also be estimated for a variable speed pumping system by computing the pump impeller power using equation (5.3) and dividing it by the measured power input to the VSD as shown in equation (10.1).

$$\text{Wire - to - water efficiency} = \frac{\text{Pump impeller power}}{\text{Power input to the drive}} \qquad (10.1)$$

Example 10.2

A variable flow water pumping system uses a VSD to vary the capacity of the pump. The pump speed is varied by adjusting the power supply frequency from 50 Hz to 30 Hz using the VSD.

The system flow rate and pressure head at the different operating speeds of the pump are provided in Table 10.2. The estimated efficiency of the pump at different operating speeds (obtained from the pump supplier) is given in Table 10.3 while the combined operating efficiency for the motor and VSD at different load conditions is provided in Table 10.4.

Compute the wire-to-water efficiency for the pumping system at the different operating speeds (the efficiency of the drive coupling can be neglected). The motor used is rated at 90 kW.

Frequency of power supplied to motor (Hz)	**Pump speed (rpm)**	**System flow rate (m^3/s)**	**System pressure head (kN/m^2)**
50	1450	0.1	600
45	1305	0.09	486
40	1160	0.08	384
35	1015	0.07	294
30	870	0.06	216

Table 10.2 System flow rate and pressure head

Pump speed (rpm)	**Pump efficiency (%)**
1450	75
1305	72
1160	70
1015	65
870	62

Table 10.3 Pump efficiency at different operating speeds

Motor loading (%)	**Motor and VSD efficiency (%)**
100	92
90	91
80	88
70	80
60	75
50	70
40	60
30	55
20	50

Table 10.4 Combined efficiency of the motor and VSD

Solution

From equation (5.3), the input power to the pump can be computed in kW as follows

= (system flow rate, m^3/s x system pressure, N/m^2) / (1000 x pump efficiency)

Similarly, pump impeller power (kW) = system flow rate, m^3/s x system pressure, kN/m^2)

The computed pump input power is tabulated in Table 10.5.

Pump speed (rpm)	**System flow rate (m^3/s)**	**System pressure head (kN/m^2)**	**Pump impeller power (kW)**	**Pump efficiency (%)**	**Pump input power (kW)**
1450	0.1	600	60.0	75	80
1305	0.09	486	43.7	72	61
1160	0.08	474	30.7	70	44
1015	0.07	294	20.6	65	32
870	0.06	216	13.0	62	21

Table 10.5 Estimated pump input power

Using the pump input power computed in Table 10.5 and the efficiency of the motor and VSD from Table 10.4 (rounded-off to the nearest available value), the respective motor loading and wire-to-water efficiency for the system is tabulated in Table 10.6.

Pump speed (rpm)	**Pump efficiency (%)** Column A	**Pump input power (kW)** Column B	**Motor loading (%)** Column C = Column B / 90 kW	**Motor and VSD efficiency (%)** Column D (from Table 10.4)	**Wire-to-water efficiency for the system (%)** Column E = Impeller power = Column A (Pump efficiency) x Column D (Motor and VSD efficiency)
1450	75	80	89	91	68
1305	72	61	68	80	58
1160	70	44	49	70	49
1015	65	32	36	60	39
870	62	21	23	50	31

Table 10.6 Estimated wire-to-water efficiency for the system

10.6 Prioritising efforts to improve energy efficiency

Since motor driven systems account for a significant portion of the electrical energy consumed in buildings and industrial plants, it is recommended to implement a process to identify the main energy consuming systems so that action can be taken to focus on the greatest energy saving opportunities.

In buildings, due to the relative uniformity of motor driven systems used, such an exercise can be easily executed by considering the rated motor power and operating hours of each system. However, in industrial plants, such an exercise would need a considerable amount of resources. Therefore, in such situations, a screening approach to identify the biggest energy saving opportunities is recommended.

Such a screening process would first need to identify the systems that account for the majority of the energy use. Typically, these would include pumps, fans and compressors which normally account for about 70% to 80% of the total electrical energy used in industrial plants. Once this is done, further screening can be done to identify the areas where resources can be directed to maximise the benefits for each type of system. Figure 10.10 illustrates a screening process that can be used for pumping systems.

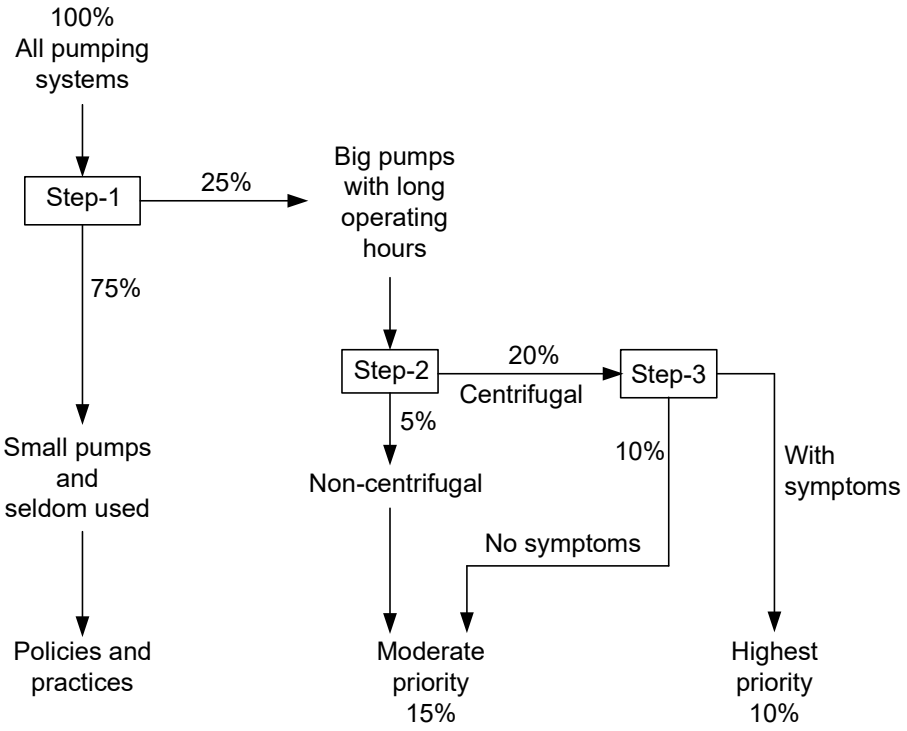

Figure 10.10 Sample screening process for pumps (ref. US Department of Energy publication)

As shown in Figure 10.10, the first step in the screening process is to separate the 20 to 25% of the pumps that have the highest rated power and long operating hours.

The next step involves identifying the type of pumps so that the effort can be focused on centrifugal pumps which offer the greatest energy saving opportunities.

The final step in the screening process is to identify those pumps or pumping systems which exhibit “symptoms” of energy saving opportunities such as:

- throttled valves
- continuous bypassing
- continuous operation of pumps serving batch operations
- continuous operation of pumps serving variable loads
- noise due to cavitation

Summary

This chapter provided a description of the main types of transmission drives used in motor driven systems and their main applications Thereafter, the concept of wire-to-water efficiency and wire-to-air efficiency, which are measures of the overall system efficiency, was explained.

References

1. Energy Management of Motor Driven Systems, US Department of Energy, Office of Industrial Technologies, 2000.
2. Improving Fan System Performance: A source book for industry, US Department of Energy Industrial Technologies Program, 2003.
3. Improving Motor and Drive System Performance: A source book for industry, US Department of Energy Industrial Technologies Program, 2008
4. Improving Pumping System Performance: A source book for industry, US Department of Energy Industrial Technologies Program, 2008.
5. Jayamaha, Lal, Energy-Efficient Building Systems, Green Strategies for Operation and Maintenance, McGraw-Hill, 2006.
6. Jayamaha, Lal, Energy-Efficient Industrial Systems, Evaluation and Implementation, McGraw-Hill, 2016.
7. Petruzella, Frank D, Electrical Motors and Control Systems, McGraw-Hill, 2010.

11.0 DEMAND MANAGEMENT

Management of power demand normally refers to minimising the maximum electrical power drawn by a building or industrial facility. Although demand management doesn't necessarily reduce energy consumption, it can help to reduce energy losses in the transmission and distribution system. In addition, demand management helps to reduce investment in power plant, transmission and distribution systems, transformers and switchgear.

Since motor driven systems account for that majority of the electrical demand in most installations, optimising them to reduce the maximum power demand can contribute immensely to the overall demand management of the electrical generation and supply network in the country.

Learning Outcomes:

The main learning outcomes from this chapter are:

1. Understanding the concept of maximum power demand
2. Assessment of the power demand using the load factor
3. Various demand management strategies

11.1 Maximum power demand

Maximum demand for a building or industrial facility is the maximum electrical power drawn from the grid in kW. The electrical demand is usually calculated by averaging the integrated power demand over a fixed interval (normally 30 minutes) using a maximum demand meter. This computation (illustrated in Figure 11.1) is performed continuously for the same fixed time interval. If the maximum demand during a particular time period is lower than the previous value, the meter retains the previous reading. However, if the new reading is higher than the previously recorded highest maximum demand, then the new value is retained. The maximum value remaining at the end of a month is taken as the maximum demand for the building for that month.

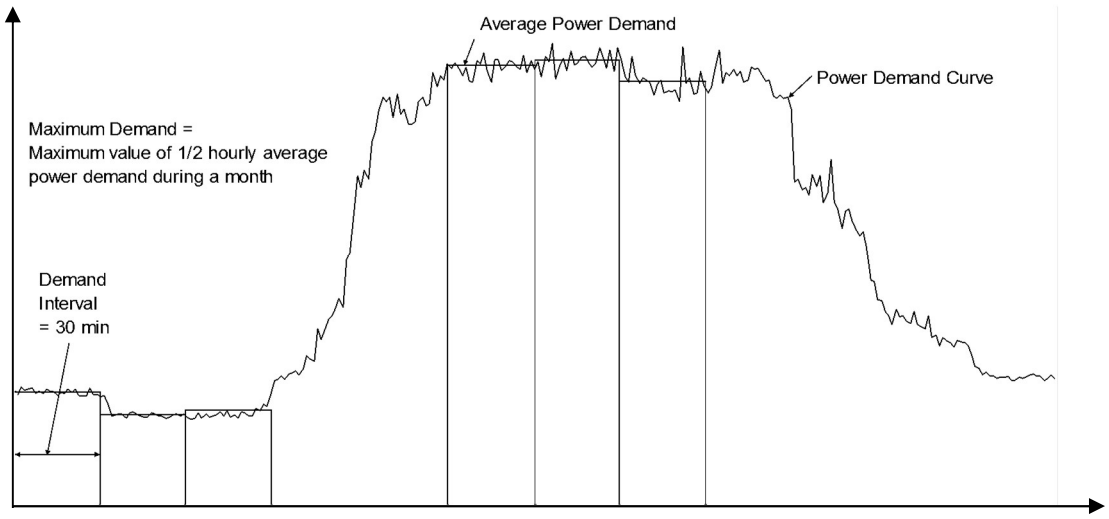

Figure 11.1 Illustration of maximum power demand

Utility companies charge consumers for the maximum demand as their power generating equipment, distribution cabling and switchgear need to be sized to satisfy the maximum demand requirements of the end-users. For example, if a consumer has high power demand for a short period of time during the day compared to the demand during other periods of time, the utility company would still need to invest in additional infrastructure to meet this demand even though it is only required for a short period of time. Therefore, to compensate for this and to encourage consumers to reduce power demand, utility companies charge for maximum power demand.

Maximum demand charges paid depend on the actual tariff structure and can represent a significant portion of the utility bill. Therefore, considerable savings can be achieved by reducing the maximum power demand.

11.2 Load factor

The load factor is the ratio of average load to peak load during a specific period of time (equation (11.1), and can be expressed as a percentage by multiplying by 100.

$$\text{Load Factor} = \frac{\text{Average power demand (kW)}}{\text{Maximum power demand (kW)}} \qquad (11.1)$$

$$= \frac{\text{kWh for month}}{\text{Maximum demand for month x 24 x no. of days in month}}$$

The load factor indicates to what degree, energy has been consumed compared to maximum demand or the utilisation of units relative to total system consumption. The highest achievable load factor is 100%. Normally the load factor for most buildings ranges from about 50% to 70%. Typical office buildings and retail malls which operate about 10 to 12 hours a day have a load factor of 50% while hotels and industrial establishments which operate 24 hours a day normally have load factors above 70%.

Although the load factor depends on the operating characteristics of systems and operational requirements, if the actual load factor is much lower than these approximate values, it is generally a good indicator of potential for reducing maximum demand.

The maximum demand for buildings can be reduced in different ways depending on the load characteristics of the building. They can be normally categorised into three demand management strategies: peak shaving, load shifting and energy management.

11.3 Peak shaving

Peak shaving (sometimes called peak clipping) involves reducing the maximum demand as shown in Figure 11.2. This strategy involves switching off equipment and systems that are considered to be non-essential during the period that the installation experiences maximum power demand. In buildings, loads that can be switched-off are those like ventilation fans, CAV AHU fans, lighting which do not cause an increase in demand once they are switched-on. In industrial facilities, reduction in demand can be achieved by switching off non-critical process loads and those that can be switched-off for a predetermined time without affecting the production process or product quality.

Peak shaving can be achieved by an EMS (Energy Management System) by programming it to switch-off equipment progressively based on a pre-set priority as the building approaches its maximum demand. In addition to the priority set on the EMS for each of the equipment that can be switched-off, other criteria such as the maximum duration (for switching off) and the maximum number of times they can be switched-off can also be programmed on the EMS to avoid discomfort to occupants and to minimise wear and tear on equipment.

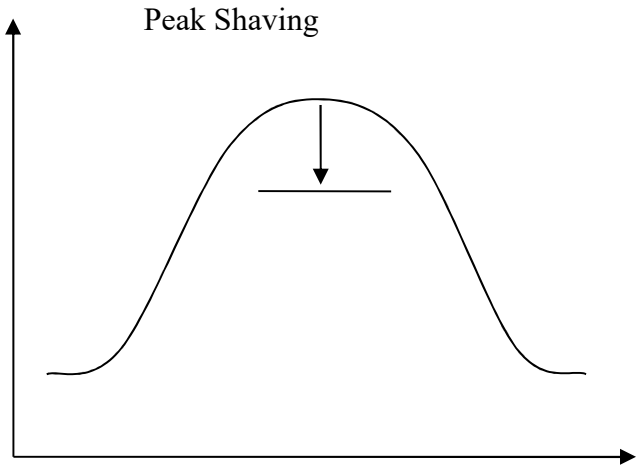

Figure 11.2 Demand management by “Peak Shaving”

11.4 Load shifting

This load management strategy is similar to peak shaving as it involves switching off loads during peak periods. However, the main difference in load shifting is that when it switches off equipment during the peak period, it is shifting this load to either before or after the peak demand period as illustrated in Figure 11.3. Some examples can be switching off fans of VAV AHUs or turning off a chiller during the peak demand period which then have to “work harder” when they are switched-on later to meet building cooling requirements.

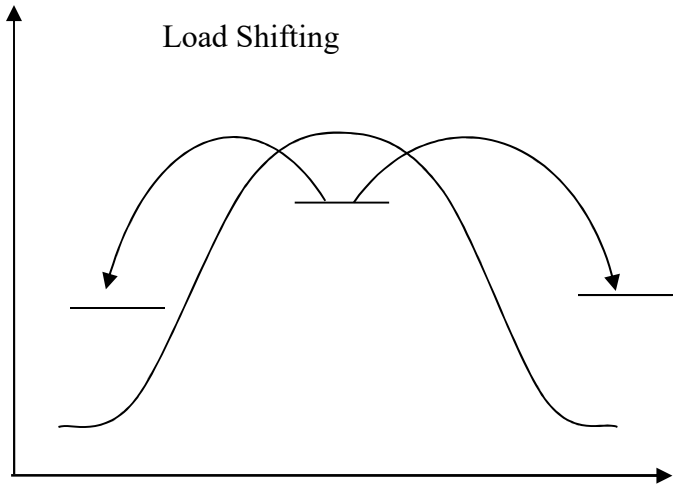

Figure 11.3 Demand management by “Load Shifting”

Another possible load shifting strategy is to use a thermal storage system for cooling which can store either chilled water or ice produced during non-peak periods and using it to cool the building during periods of peak demand. This enables either switching off all chillers or some chillers during peak periods to reduce maximum demand.

Other opportunities for load shifting also exist in situations where intermittent loads are encountered. An example of how the maximum demand can be reduced by controlling the operation of loads that normally operate intermittently is illustrated in Figure 11.4

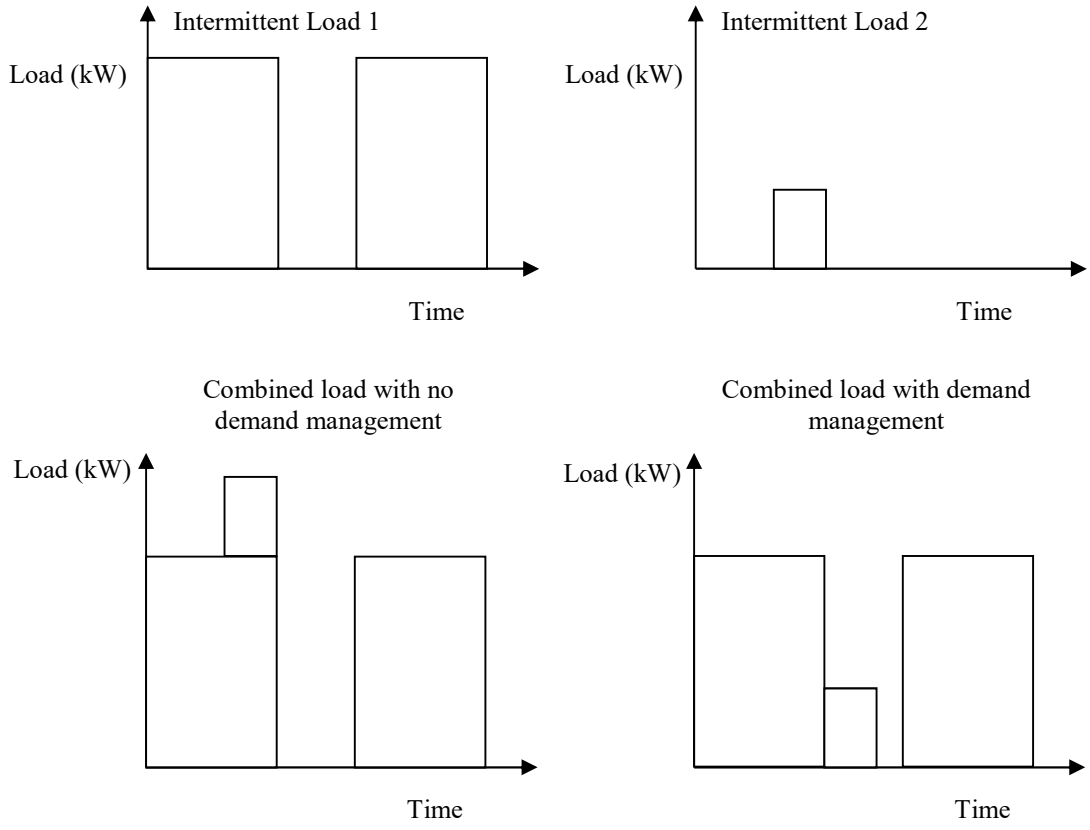

Figure 11.4 Illustration of demand reduction for intermittent loads

Example 11.1

An office building experiences a maximum power demand of 2,500 kW in the mornings between 8.00 and 8.30 am due to the switching on of the central air-conditioning system at 8.00 am. Thereafter, the power demand for the entire day remains less than 2,200 kW. The total average electrical energy consumption for the building is 20,000 kWh a day.

A trial carried out by the building management personnel shows that the building's maximum power demand can be maintained below 2,200 kW throughout the day if the central air-conditioning system is switched-on earlier at 7.30 am with one less chiller operated over a longer period to cool the building. However, the total electrical consumption for the building increases to 20,500 kWh a day.

Estimate the annual cost savings that can be achieved by switching on the air-conditioning system at 7.30 am if the building operates 250 days of the year. Take the electricity tariff to be $0.10 /kWh and the demand charge to be $10 /kW (per month).

Solution

Saving in demand charges = (2,500 – 2,200) x $10 = $3,000 / month = $36,000 / year

Extra cost for consumption = (20,500 – 20,000) x $0.10 = $50 / day

= $50 x 250 = $12,500 / year

Net cost savings = (36,000 – 12,500) = $23,500 / year

11.5 Energy management

Energy management involves energy conservation and improving the energy efficiency of a facility to reduce the power demand and energy consumption. As Figure 11.5 shows, this strategy helps not only to reduce the maximum demand but also to reduce the power demand at all times. As described in the earlier chapters of this reference manual, this is achieved by implementing various energy management and energy efficiency strategies.

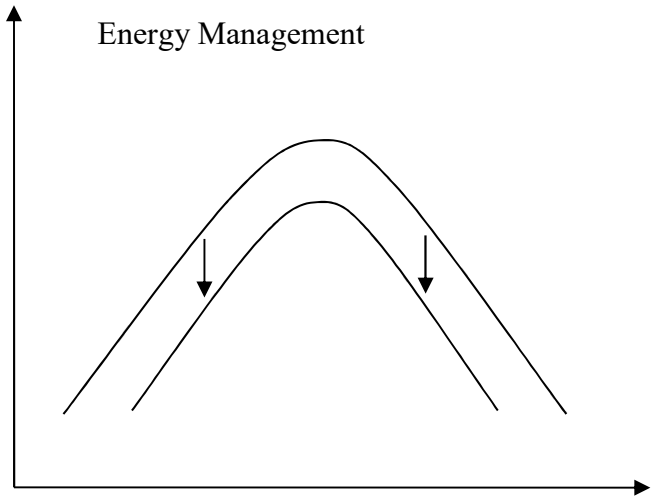

Figure 11.5 Demand management by "Energy Management"

Summary

This chapter provided an explanation of maximum power demand and the need for managing it. Thereafter, various maximum demand reduction strategies were discussed.

References

1. ASHRAE Standard 90.1, Energy Standard for Buildings Except Low-Rise Residential Buildings, American Society of Heating, Refrigerating and Air-conditioning Engineers, Inc., Atlanta, GA., 2004.
2. ASHRAE, Handbook of Fundamentals Handbook, American Society of Heating, Refrigerating and Air-conditioning Engineers, Inc., Atlanta, GA, 2009.
3. Energy Management of Motor Driven Systems, US Department of Energy, Office of Industrial Technologies, 2000.
4. Improving Fan System Performance: A source book for industry, US Department of Energy Industrial Technologies Program, 2003.
5. Improving Motor and Drive System Performance: A source book for industry, US Department of Energy Industrial Technologies Program, 2008
6. Improving Pumping System Performance: A source book for industry, US Department of Energy Industrial Technologies Program, 2008.
7. Jayamaha, Lal, Energy-Efficient Building Systems, Green Strategies for Operation and Maintenance, McGraw-Hill, 2006.

12.0 CASE STUDY

Consider the pumping system shown in Figure 12.1, which is used to provide cooling water to three heat exchangers. The system mainly consists of a cooling tower, cooling water pump and heat exchanger coils.

Estimate the pump head required and the theoretical pump power. Thereafter, suggest design changes to the system to reduce the pump power by at least 20%.

Use the data given below together with the reference data provided for valves, pipes and fittings. Clearly state any assumptions made and the basis for such assumptions.

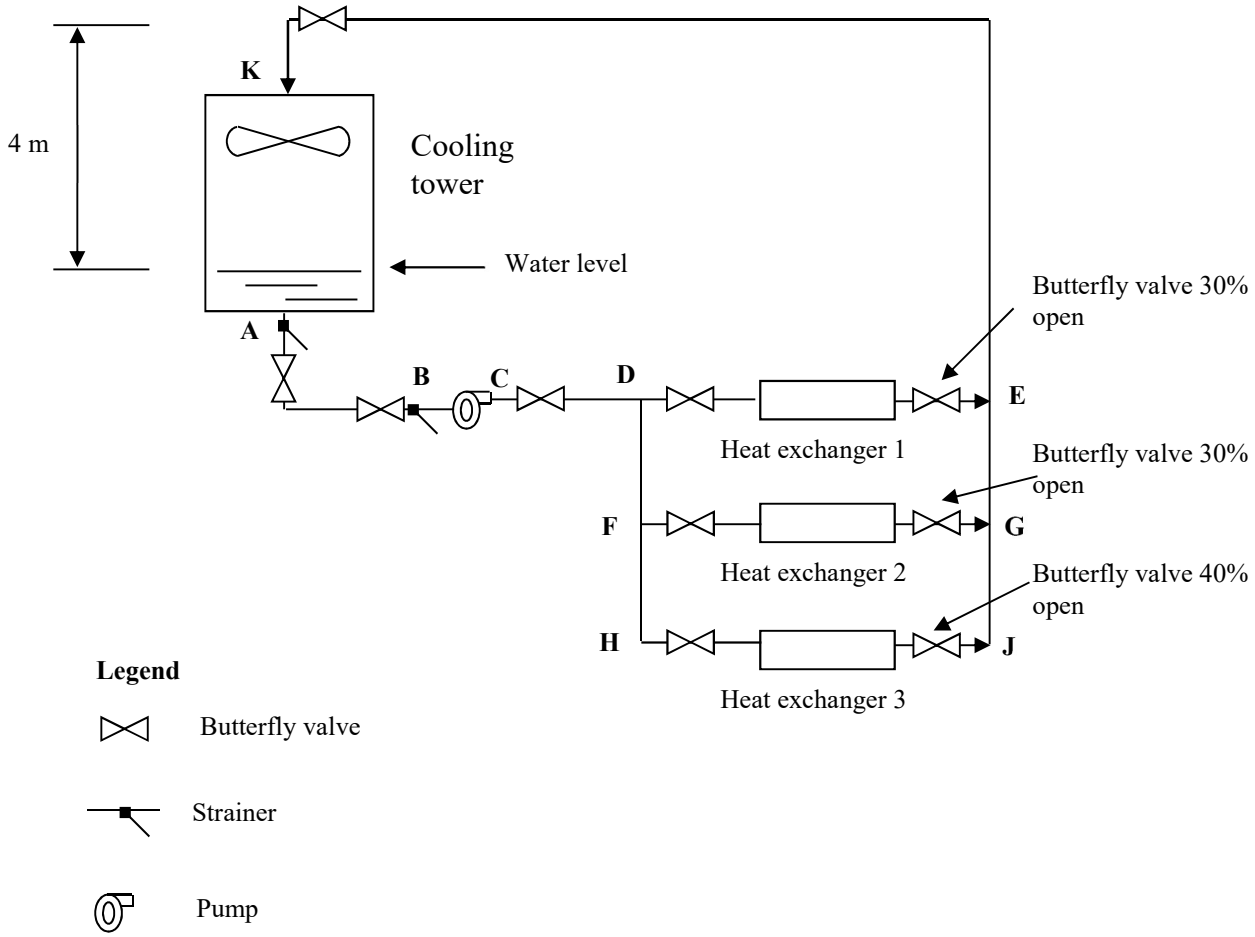

Figure 12.1 Pumping system for the case study

Data for the case study

Efficiency of motor = 88%

Efficiency of pump at operating point = 70%

Efficiency of drive coupling = 98%

All piping and fittings are commercial steel

Operation of the heat exchangers:

Heat Exchanger	Water flow rate (CMH)	Pressure loss (m)
No. 1	280	14
No. 2	280	10.1
No. 3	340	12.4

Piping details:

Pipe section	Pipe dia. (mm)	Pipe length (m)	No. of valves	No. of strainers	No. of bends	No. of Tees
AB	300	20	2	2	6	-
CD	300	40	1	-	6	-
DE	200	10	2	-	4	2
FG	200	10	2	-	4	2
HJ	200	10	2	-	4	-
DF	250	40	-	-	2	1
FH	200	30	-	-	2	1
JG	200	30	-	-	2	-
GE	250	40	-	-	2	1
EK	300	50	1	-	6	1

Use reference data from ASHRAE, Handbook of Fundamentals or any other source to find the pressure drop per metre length for the various pipes and dynamic loss factors for the fittings. Assume that the pressure loss across fully open butterfly valves is zero. If loss factor for strainers is not available, you may assume it to be the same as that for a fully open globe valve of the same size for this case study.

MOTOR DRIVEN SYSTEMS ABRIDGED SYLLABUS

1. Concept of Power and Energy

a) Calculation of energy savings

b) Power factor correction

- Implementation at component or device level
- Implementation at system level
- Economic benefits
- Technical advantage/disadvantage comparison

2. Motors

a) Operation and characteristics of electric motors

- Conventional DC Motors - shunt, series and compound
- AC Induction Motors – cage and wound rotor types
- Conventional synchronous motor
- PM synchronous motor
- Brushless DC Motor (BLDC, self synchronous motor)

b) Motor efficiency

- Various losses in motors: copper, iron, core, stray, windage, hysteresis, eddy current losses
- Motor loading and efficiency
- High efficiency motors

c) Speed control methods

- Variable applied voltage
- Variable armature current
- Variable motor field
- Variable frequency
- Combination of the above

d) Selection and sizing of motors (including industry standards)

3. Drive Systems

a) Power Electronic Converter and Inverter Switching Devices

b) Main Components of VSD

c) Types of VSD

- Voltage Source Inverter
- Current source inverter,
- PWM

d) Key features of VSD

- Rectification
- Inverting
- Harmonic filtering
- Power factor correction
- Voltage level regulation / adjustment
- Energy reversal

e) Selection, sizing and efficiency of VSD for variable Torque load / constant torque load.

f) Application of converters for AC/ DC motor speed/torque control

g) Application of converters for Permanent Magnet Synchronous (PMSM) speed/torque control

4. Efficient Driven Systems

a) Types of transmission (belts, gears, coupling, chain etc.)

b) Comparative features of transmission system

c) Selection, Sizing and Efficiency of transmission system

d) Typical Driven Systems- Pumps, Fans, Compressor, Hoist, Conveyor, etc.

- Parallel and series pumping
- Losses in pumps, pump efficiency
- Fan losses and fan efficiency

e) Affinity Laws – use affinity law to determine the min % of reduction in speed for a given % of reduction in quantity of delivery,

f) Flow of regenerative energy

g) Energy Saving opportunities in applying variable speed to motors driving centrifugal pumps and fans and application of affinity laws

h) Sizing of motors for variable torque load such as for centrifugal pumps, Fans and Compressors as well as for constant torque load.

i) Energy saving opportunities in linear load

- Geared/gearless elevator systems and escalators
- Counterbalance

j) Case studies – examples (using adjustable speed drives on centrifugal pumps and fans for energy savings under various forms of control and operations).

REVIEW QUESTIONS

1. The speed of a motor depends on:
   (a) Number of poles in the motor and insulation class
   (b) Power supply frequency motor class
   (c) Number of poles in the motor and power supply frequency
   (d) None of the above

2. Motor efficiency is defined as:
   (a) (power output) / (power input)
   (b) (power output – power input) / power input
   (c) (power input) / (power output)
   (d) power output – power input) / power output

3. The highest proportion of losses in motors is due to:
   (a) copper losses
   (b) friction & windage losses
   (c) stray losses
   (d) core losses

4. Copper losses in motors can be reduced by:
   (a) thicker steel laminations in the magnetic circuits
   (b) reducing resistance in the windings
   (c) smaller air gap between stator and rotor
   (d) all of the above

5. The service factor of a 100 kW motor is 1.15. The maximum load at which it can periodically operate without a reduction in life expectancy is:
   (a) 100 kW
   (b) 85 kW
   (c) 115 kW
   (d) 120 kW

6. Copper losses in motor windings is:
   (a) proportional to the current flow
   (b) proportional to the square of the current flow
   (c) inversely proportional to the current flow
   (d) inversely proportional to the square of the current flow

7. Input current (I), voltage (V) and power factor (PF) are measured as follows. What is the approximate input power to the motor.
   V_{ab} = 412 V, I_a = 26 amps, PF_a = 0.86
   V_{bc} = 415 V, I_b = 27 amps, PF_b = 0.88
   V_{ca} = 412 V, I_c = 26 amps, PF_c = 0.87

   (a) 18.8 kw
   (b) 29.3 kW
   (c) 13.8 kW
   (d) 16.4 kW

8. The synchronous speed of a 2 pole motor operating on 50 Hz power supply is:
   (a) 1000 rpm
   (b) 1500 rpm
   (c) 2000 rpm
   (d) 3000 rpm

9. The percentage of slip for a 6 pole motor operating with 50 Hz supply at 950 rpm is:
   (a) 4%
   (b) 10%
   (c) 7%
   (d) 5%

10. The efficiency of motors generally drops significantly when the motor loading drops below about:
    (a) 30% of rated full load
    (b) 100% of rated full load
    (c) 80% of rated full load
    (d) 90% of rated full load

11. When two identical fans operate in a series configuration:
    (a) the overall pressure developed and air flow developed is the same as that for one fan
    (b) the overall pressure developed and air flow developed is double that of one fan
    (c) the overall pressure developed is double that of one fan at the same air flow
    (d) the total air flow developed is double that of one fan at the same system pressure

12. Fan discharge losses can be minimised by:
    (a) avoiding changes in duct size immediately after the fan
    (b) using a short radius bend after the bend
    (c) having a sudden enlargement in duct size after the fan
    (d) all of the above

13. Pressure losses across media filters can be reduced by:
    (a) increasing the flow velocity
    (b) reducing filter surface area
    (c) increasing the air flow rate
    (d) reducing the flow velocity

14. If a very high safety factor is used in estimating the total pressure for a new water pump being selected the:
    (a) resultant water flow rate will be lower than the design value
    (b) resultant water flow rate will be higher than the design value but pressure drop will be lower than the design value.
    (c) resultant water flow rate and system pressure drop will be lower than the design value
    (d) resultant water flow rate will be lower than the design value but pressure drop will remain constant to the design value.

15. Efficiency of compressor systems can be improved by:
    (a) increasing intake temperature of the gas to be compressed
    (b) using multi-stage systems
    (c) throttling of the gas after discharge
    (d) insulating compressors to prevent heat transfer

16. Energy consumed by lifts (elevators) can be minimised by using:
    (a) hydraulic type lifts instead of traction type lifts
    (b) geared non-regenerative type drives
    (c) gearless non-regenerative type drives
    (d) gearless regenerative type drives

17. The air flow rate developed by a fan at a particular speed is 10 m^3/s. What is the estimated air flow rate for the same fan if the fan speed is increased by 20%?
    (a) 15 m^3/s
    (b) 21 m^3/s
    (c) 12 m^3/s
    (d) None of the above

18. The dynamic loss coefficient for water flowing through a 300 mm diameter globe valve when it is fully opened is 7. If the water flow rate is 0.1 m^3/s, what is the estimated dynamic pressure loss across the fully opened valve? (density of water and pipe diameter can be taken as 1000 kg/m^3 and 300 mm, respectively)
    (a) 15.7 kPa
    (b) 0.86 kPa
    (c) 7.0 kPa
    (d) 11.5 kPa

19. The system curve for a pumping system represents the relationship between:
    (a) pump pressure and system pressure
    (b) system flow rate and system pressure
    (c) pump flow rate and speed of the pump
    (d) None of the above

20. In a particular system a fan is driven by a motor using a belt drive. If the motor efficiency is 88%, fan efficiency is 70.5% and efficiency of the belt drive is 97%, what is the overall efficiency of the system?
    (a) 59%
    (b) 60%
    (c) 86%
    (d) 65%